VALMAR

246 PT Pneumatic Granular Applicator

OPERATOR'S MANUAL

Issue Date: June 2016

Valmar Airflo
Box 100
Elie, MB R0H 0H0
Phone (204) 353-2782
FAX (204) 353-2864

VALMAR 246PT Applicator

Table of Contents

Item	Page
Serial Number Location	3
1 - Introduction	4
2 - Safety	5
3 - Safety Decals	8
4 - Operation	11
5 - Calibration	17
6 - Adjustments and Service	29
7 - Troubleshooting	37
8 - Options	41
9 - Specifications	43
10- Parts	48

Printing Date: October 2016

VALMAR WARRANTY

All Valmar products are warranted for one year against defects in materials and workmanship and to perform according to specifications when such products are properly assembled, installed, used and maintained.

Valmar warrants that its manufactured parts will be as specified and will be free from defects in material and workmanship.

Valmar's liability under this warranty shall be limited to one of the following:

1. Repair or replacement of the defective part at our discretion.
2. Granting of a reasonable allowance providing action of dealer has been approved by Valmar.

Warranty will be allotted only upon return and inspection of part by Valmar and if part is determined to be defective in terms of materials or workmanship.

This obligation shall not include any transportation charges or any extra costs or liability for any direct, indirect or consequential damages or delay.

WARRANTY LIMITED OR VOID

Any use for purposes other than those for which the product was designed, operation beyond rated capacity, substitution of parts not approved by Valmar, or alteration or repair by others in such manner as in our judgment affects the product materially and adversely shall void this warranty.

Warranty does not apply to any machine or part which has been repaired or altered in any way so as in Valmar's judgement to affect its reliabilty, or which has been subject to misuse, negligence, or accident.

Component parts, equipment, accessories and items not fabricated by Valmar are warranted only to the extent of the original manufacturer's warranty.

Valmar reserves the right to make improvement changes on any of our products without notice.

WARRANTY CLAIMS PROCEDURE

1. A warranty claim form must be completed by your Valmar dealer.
2. Defective parts for which a warranty claim is made must be returned to Valmar within 15 days from the claim date.

Serial Number Location

Your Valmar applicator has a model and serial number to clearly identify it. Always give your dealer the Model Number and Serial Number of your machine when ordering parts or requesting service information. Mark the model and serial numbers in the spaces provided for easy reference.

Applicator Serial Number

The Serial Number Plate is located on the front right-hand panel of the hopper as shown in the photo below.

Model No. _____

Serial No. _____

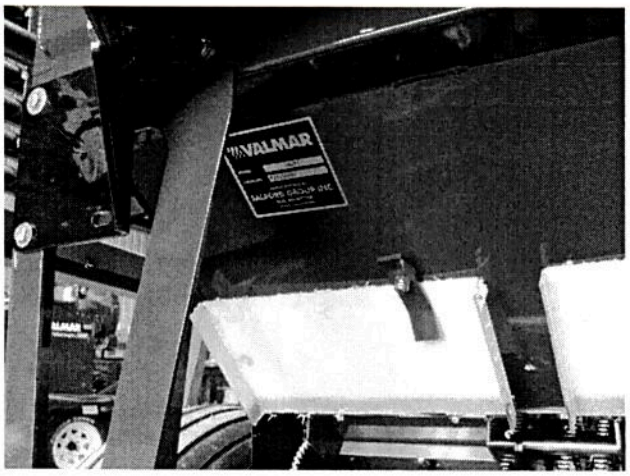

Hydraulic Motor Serial Number

_____

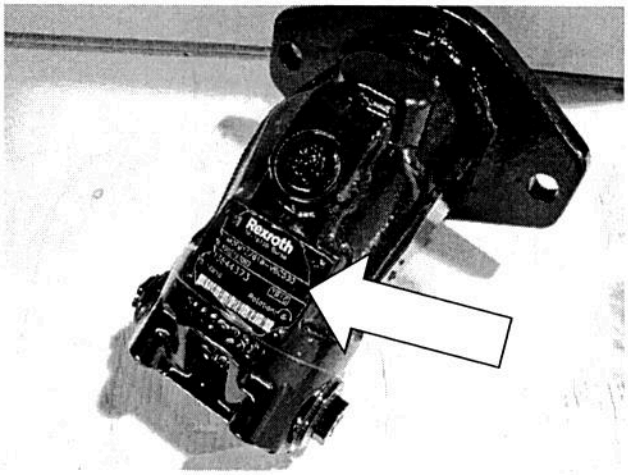

Gas Engine Serial Number

_____

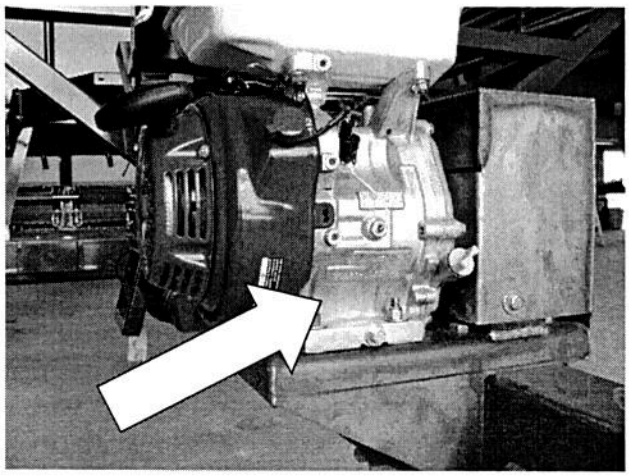

1 - Introduction

Congratulations on your choice of a Valmar applicator for your farming operation. This equipment has been designed to meet the needs of a discerning agricultural industry for the pneumatic application of fertilizer and granular herbicide products.

Safe, efficient and trouble-free operation of your applicator requires that you and all who operate or maintain this machine read and understand all information contained in this Operator's Manual.

Safety Alert Symbol

This SAFETY ALERT SYMBOL indicates important safety messages in this manual. When you see this symbol be alert to the possibility of personal injury. CAREFULLY READ THE MESSAGE THAT FOLLOWS.

Dealer Information

Your Valmar dealer is your source for parts and service for your applicator. If you need any assistance with the operation or maintenance of your machine, call your Valmar dealer. Write the dealer's name and phone number below for handy reference.

Dealer's Name: _____

Dealer Phone No.: _____

Operator Orientation

The directions left, right, front and rear as mentioned throughout the manual are as seen from the driver's seat and facing in the direction of travel.

2 – Safety

Read the Operator's Manual

ALL OPERATORS must read and understand the Operator's manual before working with the applicator. Review the Operator's manual and safety decals of this machine before each season of use.

The Safety Alert Symbol is on all safety decals. When you see the symbol, follow the instructions to avoid injury or death.

Signal Words

Note the use of the words **DANGER**, **WARNING** and **CAUTION** on the safety decals. Each signal word denotes a different type of hazard as shown:

DANGER

AN IMMEDIATE AND SPECIFIC HAZARD WHICH WILL RESULT IN SEVERE PERSONAL INJURY OR DEATH IF THE PROPER PRECAUTIONS ARE NOT TAKEN

WARNING

A SPECIFIC HAZARD OR UNSAFE PRACTICE WHICH COULD RESULT IN SEVERE PERSONAL INJURY OR DEATH IF PROPER PRECAUTIONS ARE NOT TAKEN

CAUTION

UNSAFE PRACTICES WHICH COULD RESULT IN PERSONAL INJURY IF PROPER PRECAUTIONS ARE NOT TAKEN, OR AS A REMINDER OF GOOD SAFETY PRACTICES

Operator Safety

If your Valmar applicator is mounted on a towed implement, the operator must observe the safety requirements of both the towing vehicle and the applicator. Applicator owners must give operation instructions to employees or operators before allowing them to operate the applicator, and at least annually thereafter according to OSHA (Occupational Safety and Health Administration) Regulation 1928.57.

Follow these safety guidelines:

1. Provide a first aid kit. Store it in a visible, accessible location and know how to use it.
2. Keep safety decals clean and legible at all times. Replace missing or damaged decals.
3. Before servicing, adjusting, repairing or unplugging the applicator, stop the tractor, set the park brake and wait for all moving parts to come to a complete stop.
4. Ensure that all guards and shields are in place. Replace any that are damaged.
5. Have a qualified tire repairman perform any tire repairs. Improper tire mounting procedures can produce a serious explosion resulting in injury or death.
6. Do not allow riders on the applicator.

PTO Shaft Safety

1. Do not operate any PTO unless all shields and guards are in place.
2. Stop the tractor and wait for all moving parts to come completely to a stop before making any adjustments to the PTO.
3. Be sure that both ends of the PTO shaft are coupled securely.

Granular Chemical Safety

1. Read and strictly follow the manufacturer's instructions found on the product container.
2. Wear chemically resistant clothing, gloves and safety goggles.
3. Avoid contact with skin and eyes.
4. Wear a respirator as directed by the chemical manufacturer.
5. Wash thoroughly after working with chemicals, especially before eating.
6. Wash all clothing contaminated by chemicals.
7. Wash down the applicator prior to any maintenance. Dispose of wash water in accordance with local standards and laws.
8. Know the poison control emergency telephone numbers in your area.

Hydraulic Safety

1. Keep hydraulic components clean so that leaks can be easily identified.
2. Replace damaged hoses and fittings.
3. Use a piece of cardboard when trying to pinpoint leaks. Wear heavy gloves and a face shield.
4. Have hydraulic components repaired by a qualified repair facility. Makeshift repairs may fail suddenly creating a hazardous condition.
5. If injured by a high pressure stream of hydraulic fluid, seek medical attention immediately. Serious infection can result.

Fan Safety

1. Do not operate the fan unless all shields and guards are in place.
2. Stay well away from the fan during operation. Keep others away.
3. Stop the tractor and wait for all moving parts to come completely to a stop before making any repairs to the fan or servicing its drive components.

Transport Safety

1. Be sure that an SMV (Slow Moving Vehicle) sign and all reflectors and lights required by local highway authorities are in place, clean and functional.
2. Use a hitch pin that is strong enough to tow the implement without breaking.
3. Use the safety chain to secure the hitch on the implement to the tractor.

4. Do not exceed the maximum speed rating on implement tires (generally 25 mph or 40 kph).
5. Ensure that the booms are folded and latched in place.
6. Disengage the metering drive tire. Failure to do so may result in the metering of chemicals and fertilizer onto roadways. This may also cause the metering drive to operate at very high speeds and damage some of its components.

Storage Safety

1. Store the applicator on a firm, level surface.
2. Thoroughly clean the applicator before storing to avoid contaminating the surrounding area with pesticide and fertilizer residue. Dispose of the wash water in accordance with local standards and laws.

3 – Safety Decals

Safety Decals

Keep safety decals clean and legible at all times. Replace decals that are missing or have become illegible. Safety decals are available from the Valmar Parts Department.

Safety Decal Installation

- Be sure the installation area is clean and dry.
- Decide on the exact position before removing the backing paper.
- Remove the smallest portion of the backing paper.
- Align the decal over the desired area and press the small portion of the decal into place.
- Remove the remainder of the backing paper and press the entire decal in place.
- Pierce any air pockets and smooth them out.

Familiarize yourself with the location and message of all safety decals on these pages.

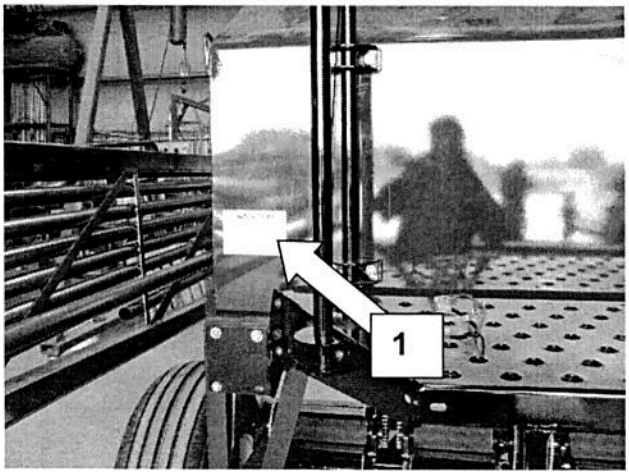

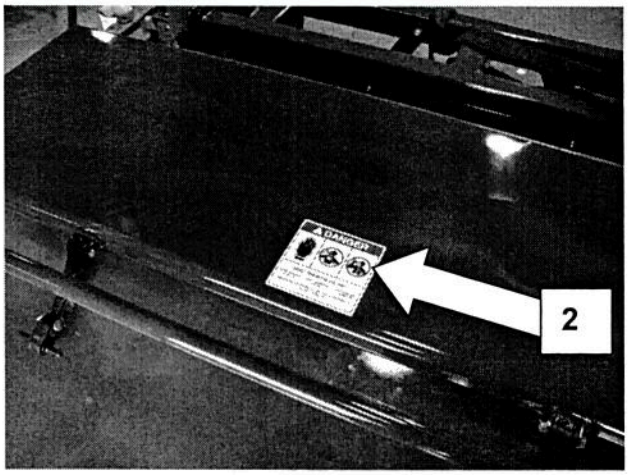

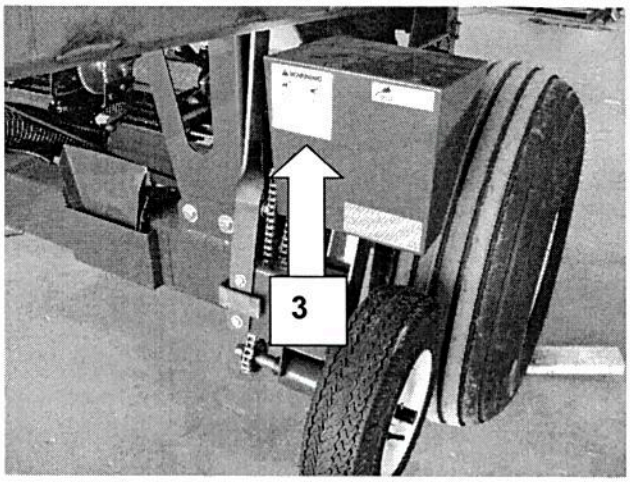

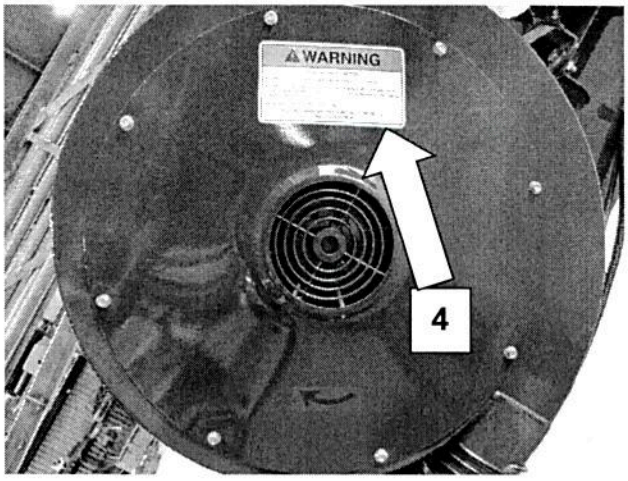

⚠ CAUTION

- Read and understand manual before operating.
- Read and follow safety precautions from chemical manufacturer before starting to use.
- Do not allow riders.
- Keep all shields in place.
- Keep hands, feet, clothing and hair away from moving parts.
- Stop engine and fan drive, remove key. Set park brake, and wait for all moving parts to stop before servicing, adjusting, repairing, unplugging and filling.
- Block up before working beneath unit.
- Review safety instructions annually.

22.3915

Decal 1

⚠ DANGER

TOXIC CHEMICAL HAZARD

WEAR RUBBER GLOVES	DON'T BREATHE VAPOR	DON'T INGEST CHEMICAL

EXPOSURE TO CHEMICAL CAN RESULT IN SERIOUS INJURY OR DEATH.

22.5840

Decal 2

Decal 3

Decal 4

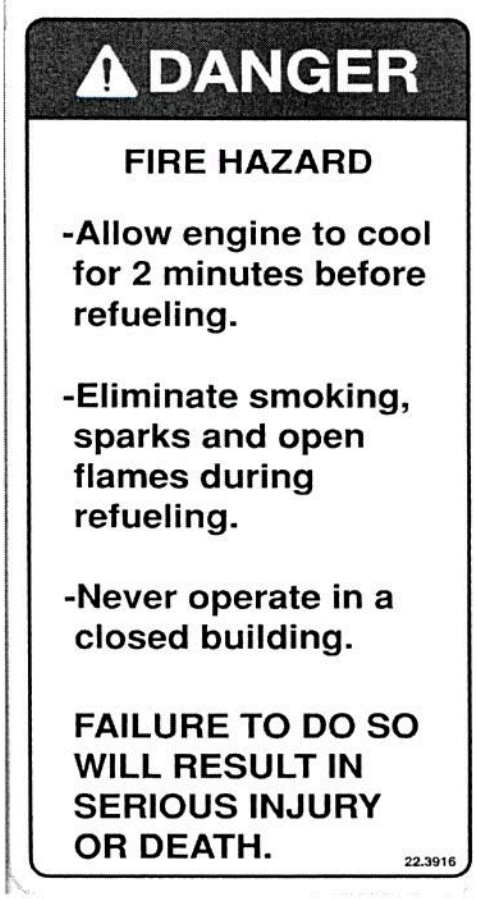

Decal 5

4 - Operation

Your Valmar applicator is designed to efficiently broadcast seeds and granular chemicals.

As noted in the diagram below, the system operates by using a hydraulically (optional gas engine) powered **fan** to blow product through an air delivery system. A grooved **metering roller** accurately meters product from the **hopper** into the **venturis**. Air passing through the manifold and venturis draws the product into an airstream and sends it down a **distribution hose** where it can be spread by a **deflector**. Product application rate is controlled by a sixty speed gearbox driven by a metering wheel in contact with the ground.

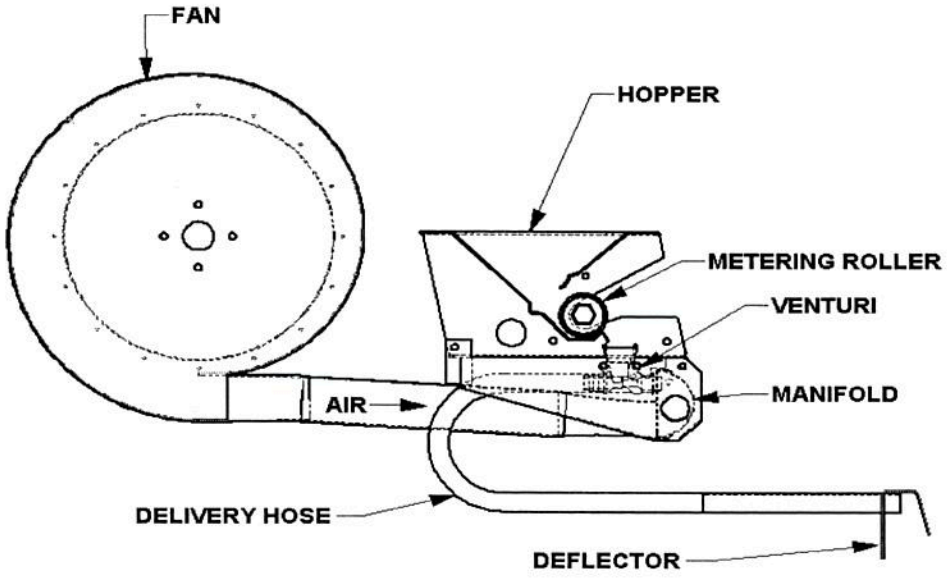

Figure 4-0-1: How the System Works

Safe Operation

Efficient and safe operation of the Valmar Pneumatic Applicator requires that each operator reads and understands the operating procedures and all related safety precautions outlined in this section. A pre-operation checklist is provided. It is important for both personal safety and maintaining the good mechanical condition of the Applicator, that this checklist is followed.

Pre-Operation Checklist

Before operating the applicator and each time thereafter, check off the fallowing areas:

1. Check the implement and applicator hydraulic system. Ensure that the hydraulic reservoir in the tractor is filled to the required specifications.
2. Inspect all hydraulic lines, hoses, fittings and couplers. Use a clean cloth to wipe any accumulating dirt from the couplers before connection to the tractor's hydraulic system.
3. Inspect all delivery hoses for any wear and restrictions. Repair or replace if necessary.
4. Inspect the hopper for accumulation of any foreign material that could plug the venture system.
5. Check all the chains, sprockets, belts and pulleys for proper adjustment and tension. Adjust as shown in the Adjustment and Service section of manual.
6. Check the fan and manifold for any accumulation of straw of dirt. Clean as required. Run the fan at field speed to clear hoses and outlets of foreign material.
7. Check the metering rollers. They must turn easily. Worn rollers will alter rates.
8. Ensure that all bearings turn freely.
9. Inspect the gearbox for alignment and proper lubrication. Refer to Adjustment and Service section of manual.
10. Operate the electrical clutches for proper engagement. Refer to Adjustment and Service if clutches do not work properly.
11. Make sure that all guards and shield are in place.
12. Check tire pressure on all tires. Inflate to 30 psi.

Control Unit (Figure 4-2)

The applicator is equipped with an electrically operated control unit. The unit allows selection of 1, 2, 3 or 4 metering rollers for product application. The control unit also displays manifold pressure in inches of water column. Refer to Assembly and Installation Manual for control unit installation.

Power Switch

Push the power switch to "ON" position for operation of control unit. A green light next to the switch indicates that power is on.

Selector Switches

Press switch L1 to activate the left outer meter roller, L2 for the left inner, R1 for the right outer and R2 for the right inner meter roller. Turn off the desired section when finishing a field or where overlapping may occur. Each switch will light up when it is selected.

Pressure Alarm

A red ALARM light and buzzer alerts the operator to inadequate or excessive air manifold pressure. Correct manifold air pressure is 17 to 20 inches of water column.

Figure 4 - 2: Control Unit

Gas Engine Fan Drive (Optional)

The 246PT can be equipped with a 9 hp Honda engine to drive the fan.

Refer to the Honda Owner's Manual for correct startup and operation of the engine.

The engine is equipped with centrifugal clutch that engages at 1600 rpm. Below that speed the fan will not operate.

Hydraulic Fan Drive

Operation of the hydraulic fan drive requires an oil flow of 11 US gallons per minute.

The major components of the hydraulic fan drive are:

1. The hydraulic motor for operating the fan.

2. The check valve which allows the fan to free wheel when the oil flow is stopped.

The hydraulic fan requires a separate case drain line which must be connected to a zero pressure tank port. *Failure to connect the case drain will result in immediate failure of the fan motor seal.*

Fan speed must be adjusted using the tractor's adjustable flow control valve. With the control unit ON, gradually increase the hydraulic flow until the control unit displays a manifold air pressure of between 17 and 20 inches of water column.

Shut-Off Gate & Metering Rollers (Figure 4-3)

The shut-off gates are located above each metering roller. They must be fully open when metering product. Do not use the shut-off gates to regulate product flow. The shut-off gates can be pushed down when removing the metering rollers if product is still in the hopper.

The metering rollers are held in place by a bearing clip on either end of the roller. Pull down on the manifold latches to lower the manifold. Pull up on the bearing clips to release the metering roller.

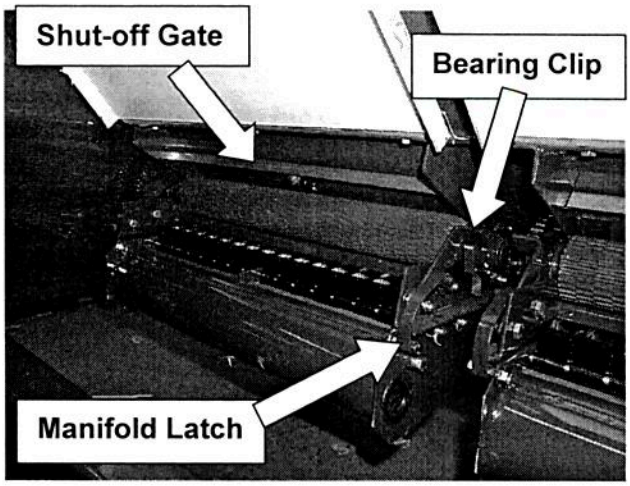

Figure 4-3: Metering Roller

Metering Roller Gap

Product application rate can be affected by the gap between the metering lip. Maintain a gap of ¼ inch for the RED roller as well as the GREY roller. See the Adjustments and Service Section of this manual for instructions on setting the roller gap. If lower application rates are desired for seeds like canola, the gap can be lowered to 1/8". Seed must meter out from the bottom of the metering roller.

Setting the Application Rate

Up to sixty (60) product application rates are available with the mechanical metering gearbox. Three mechanisms need to be set to select the desired application rate: input ratio, range and speed.

Input Ratio

Four gearbox input ratios can be selected by pairing the 12 and 34-tooth gears or the 19 and 27-tooth gears on the side of the gearbox. The available ratios are Ultra Low, Low, Medium and High. Select the desired input ratio as fdlows:

1. Raise the gearbox shield.

2. Select the pair of gears corresponding to the desired input ratio and install them in the correct orientation shown in the

following diagrams, using linch pins on the correct shafts.

3. If the appropriate gears on not on the shafts, they can be found on the storage shaft as indicated by the diagrams.

4. Store the unused gears on the storage shaft.

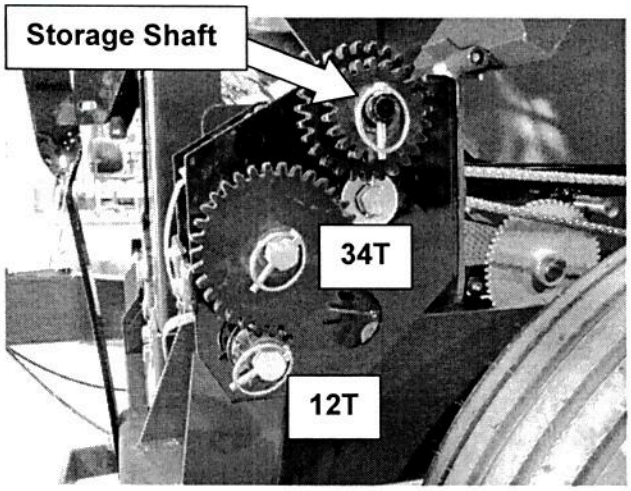

Figure 4 - 4: Ultra Low

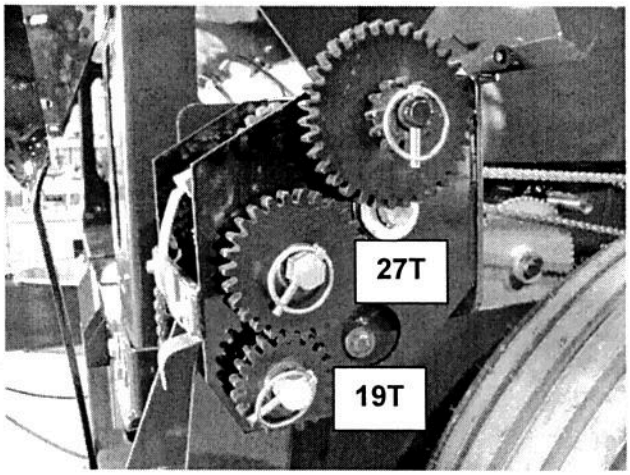

Figure 4 -5: Low

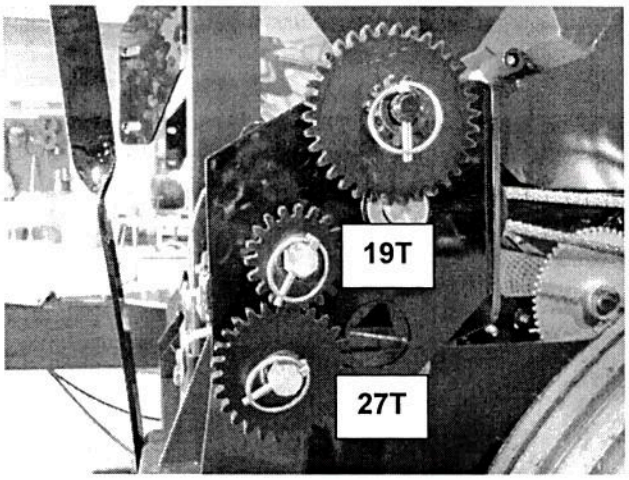

Figure 4 - 6: Medium

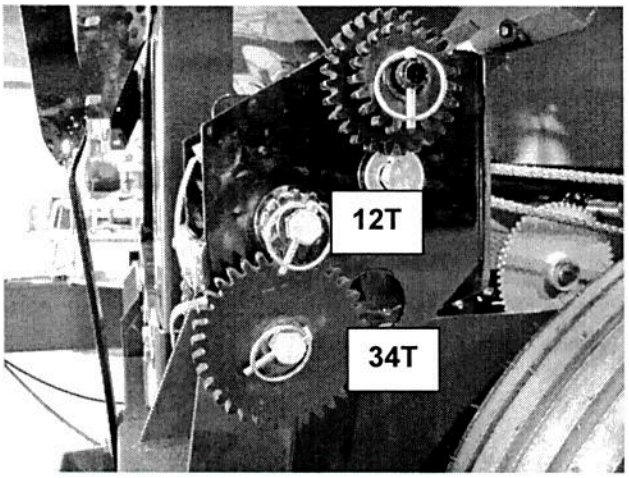

Figure 4 - 7: High

Range Selection (Figure 4-8)

1. Release the clip on the speed shifter and lift it up.

2. Move the range lever to the "A" or "B" position. The letters are laser-cut into the gearbox case.

3. Rotate the gears manually to ensure complete engagement. Lock the speed shifter into place by pushing down on the clip.

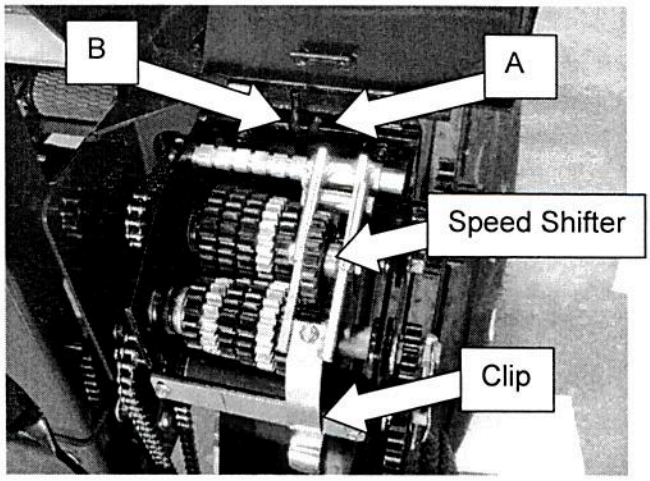

Figure 4 - 8: Range & Speed Selection

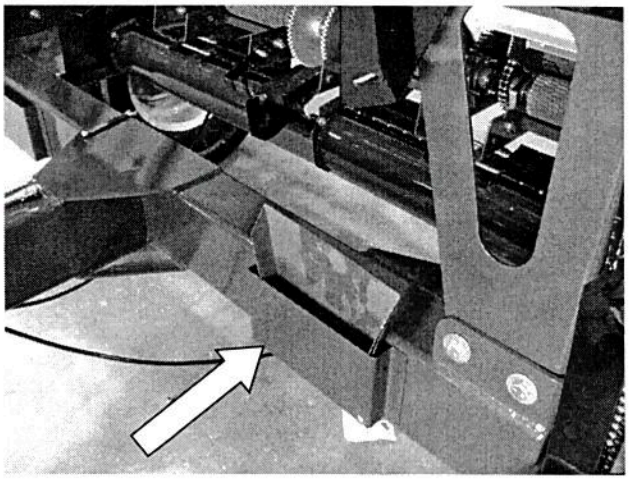

Figure 4-9: Funnel Storage

Speed Selection

1. Release the clip on gearbox speed shifter and lift up.

2. Move the speed shifter sideways to the correct numbered detent position (1 thru 8, stamped into the shaft). Drop the speed shifter into the detent slot.

3. Rotate the gearbox manually to ensure proper gear engagement. Lock the speed shifter in place by pushing down on the clip.

Funnels

Four funnels are provided for each machine for calibration and for emptying the hopper. Remove or install the funnels by rotating the storage latch until they are released or secured.

Storage

The funnels are stored on the front left and right hand sides of the hopper frame as noted in Figure 4-9.

Installing the Funnels

1. Remove the funnels from their storage positions.
2. Pull on the manifold latches shown in Figure 4-3 to lower the manifold.
3. Place the wide end of the funnels under the front edge of the metering lip. Make sure the tabs on the back of the funnels engage two venturi cups.

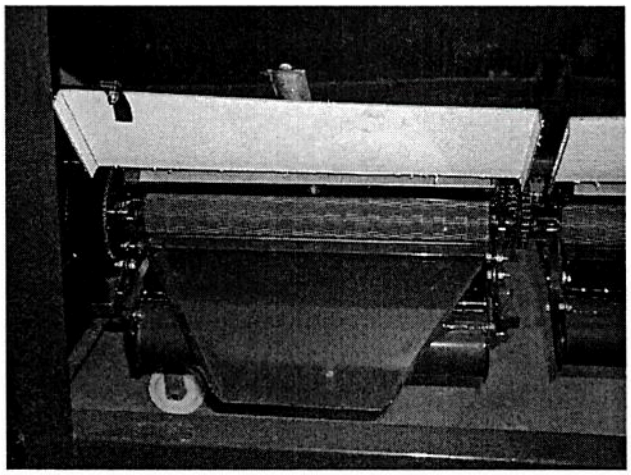

Figure 4-10: Funnel Installation

Wheel Drive Engagement

Engage the wheel drive by pushing on the spring steel handle until it comes out of the rear slot on the engagement plate. Pull the handle away from the hopper and slide it forward along the engagement plate. Once it gets past the front of the plate, push the handle towards the hopper until it engages the retention slot. The wheel drive tire and the trailer tire should be in contact. When the electric clutches are powered up, the metering system will begin applying product.

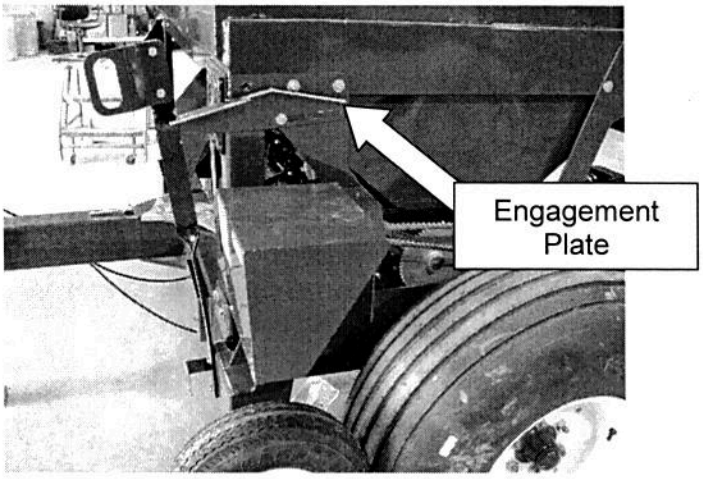

Figure 4-11: Engagement

Wheel Drive Disengagement

Disengage the wheel drive by pulling on the spring steel handle until it comes out of the front slot on the engagement plate. Allow the handle to slide rearwards past the end of the engagement plate. Push the handle towards the hopper until it engages the retention slot at the rear of the engagement plate. There should now be space between the ground drive tire and the trailer tire.

Always disengage the wheel drive before road travel!

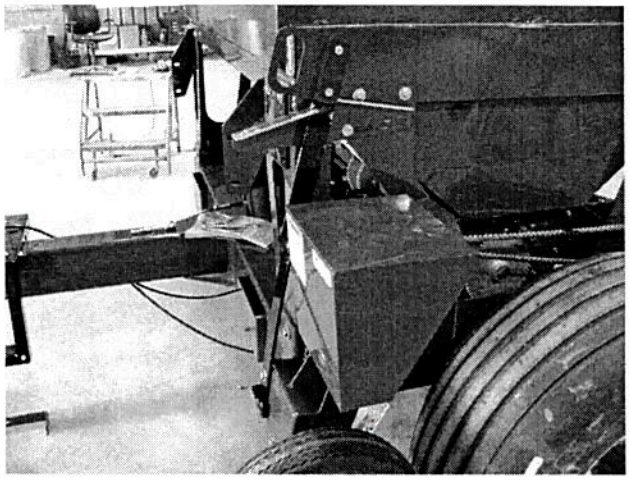

Figure 4-12: Disengagement

5 – Calibration

Calibration determines the actual product flow rate of your applicator. Generally the metering rate of fertilizer, granular product and seed is predictable as long as its properties are consistent. However, metering rate variations are possible and may be caused by:

- Manufacturer's quality control problems.
- A change in product density due to settling in transport.
- Damaged or worn metering components.
- Variations in seed size and density due to changes in growing conditions.

For these reasons, product flow rate charts are intended as a guide only. Calibration is essential for accurate application. The applicator should be calibrated the first time a new fertilizer or granular product is used and periodically thereafter. For seed, the applicator should be calibrated each time a particular batch of seed is used. When applying seed mixtures such as cover crop, consult the New Product Calibration section of this chapter.

Use the following procedure to ensure that your applicator is metering product as accurately as possible. Refer to the Operation Chapter of this manual for specific instructions on setting the metering components.

Calibration Set Up

1. Pour sufficient product into all metering bottoms for calibration.
2. Lower all manifolds by pulling the latches on each side of manifold assembly.
3. Install the funnels as shown in Figure 5-1. Make sure the two tabs on the back funnels each engage a venturi cup.

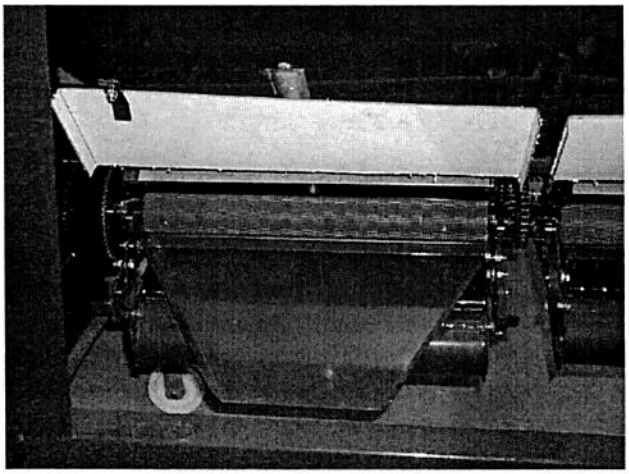

Figure 5-1: Calibration Funnel

4. Place a container under each of the funnels to collect and weigh the product in.
5. Ensure hopper gates are fully open.
6. Engage all metering drive clutches.
7. Remove the calibration crank from its storage position on the wheel drive

mechanism as shown in Figure 5-2.

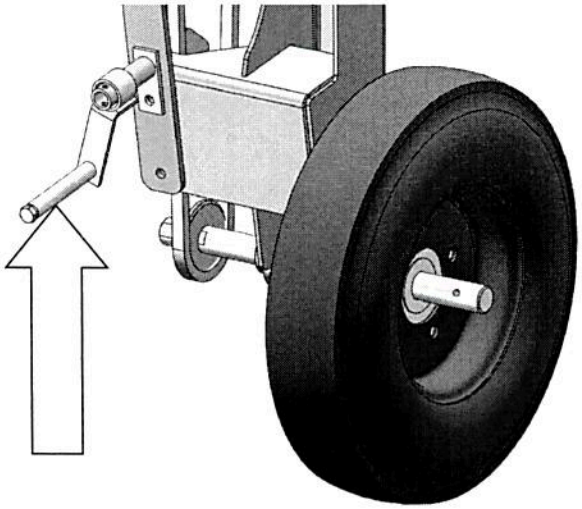

Figure 5-2: Calibration Crank Storage

8. Install the crank on the ground drive tire as indicated in Figure 5-3. Make sure the ground drive tire is disengaged. Turn the crank in the direction indicated until product is falling evenly across the entire width of metering rollers. The product must meter out from the bottom of the roller not the top.
9. Empty all collection containers into the hopper. Measure and record the weight of each empty container.

Figure 5-3: Calibration Crank

Calibration Procedure

1. Set the gearbox to the desired speed as shown in the Operation section of this manual.

2. Turn the crank exactly 35 turns. This is 1/5 of an acre. (One acre is 176 turns)

3. Weigh all containers. Subtract the weight of the empty containers. The product weight is the application rate in lbs/acre at the selected gearbox setting.

4. Find the calibration weight by multiplying the weight collected by 5.

Calibration Results

Compare the calibration results with the Product Flow Rate Charts in this manual. A difference in flow rates could indicate the following:

- Incorrect sprocket installation on the ground drive system. See Figure 5-4 for correct sprocket layout.
- Gearbox is not properly set.
- The flow rate characteristic or density of the product has changed.
- Metering rollers are worn or damaged.
- Metering roller gap is not correct.
- A mathematical error was made.

If a difference occurs after eliminating the possible causes listed above, contact your Valmar dealer.

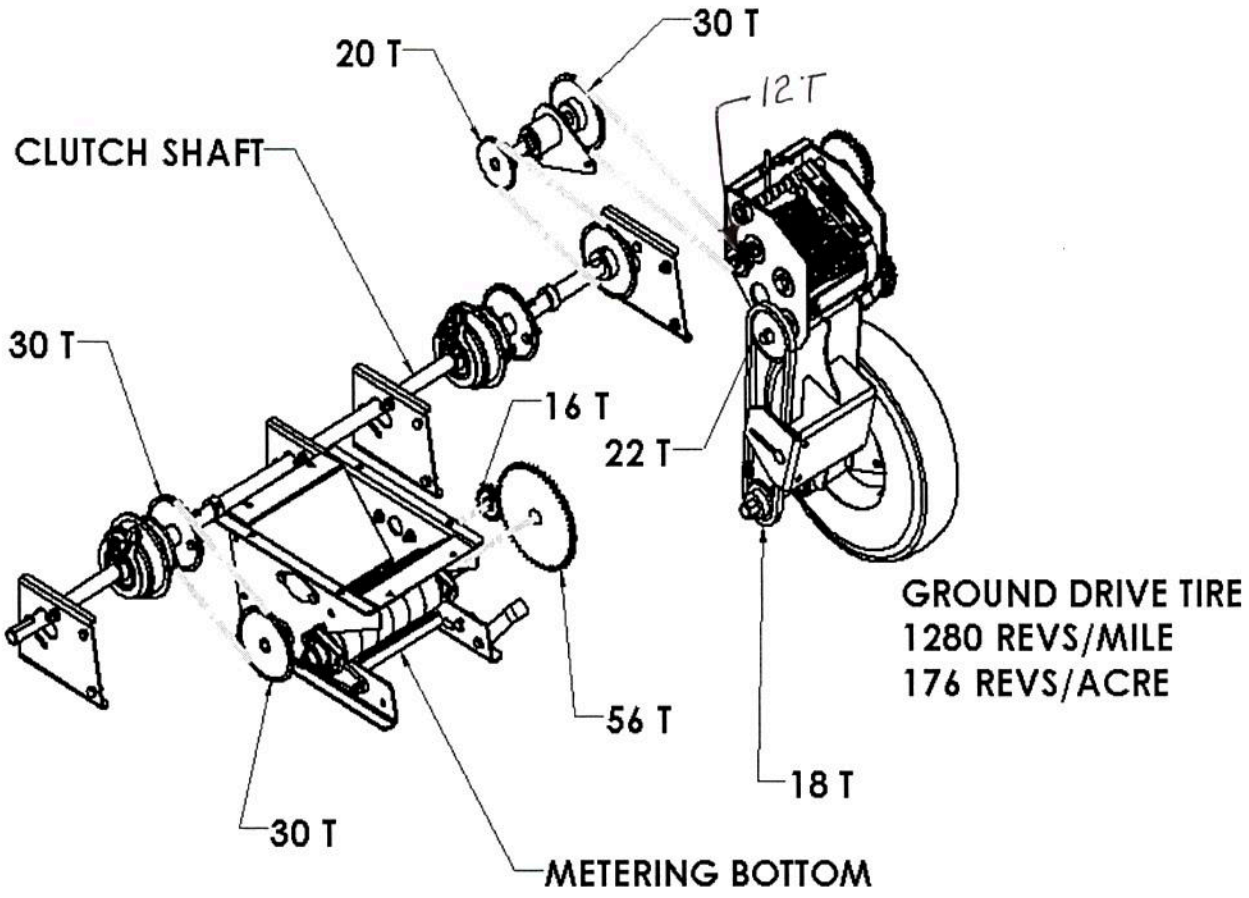

Figure 5-4: Sprocket Layout

Up to date charts for a wide variety of pesticides, seeds and fertilizers are available at Valmar's website:

www.valmar.com

Seeding canola with your Valmar

Due to the large numbers of canola varieties and variations in seed size, calibration is absolutely essential when seeding canola with a Valmar. Consult the New Product Calibration section on Page 26 for instructions.

For more accurate application of canola at low rates, it is advisable to lower the roller gap for the Red metering roller from ¼" to 1/8". See Page 33 of this manual for further instructions.

Flow Rates in lbs/acre for RED ROLLER

Mar-09

Valmar 1655, 2055, 2455, 3255 IM, 245 PT, 245TM, 242TM, 1255 PT, 6600/7600 PT, 1255 TR, 1255 IM, 5500PT

Red roller - 1/4 in. gap

PESTICIDE	GEARBOX SETTING																GEARBOX INPUT RATIO
	NO. 1		NO. 2		NO. 3		NO. 4		NO. 5		NO. 6		NO. 7		NO. 8		
	A	B	A	B	A	B	A	B	A	B	A	B	A	B	A	B	
Sonalan 10G		1.8	1.9	2.0	2.1	2.2	2.3	2.4	2.5	2.6	2.8	2.9	3.1	3.2	3.4	3.6	**ULTRA LOW RATIO**
Avadex BW, Avadex MicroActive, Fortress		1.9	2.0	2.1	2.2	2.3	2.4	2.5	2.6	2.8	2.9	3.1	3.2	3.4	3.5	3.7	
Advance 10G, Fargo, Buckle, Treflan TR10(USA)		1.9	2.0	2.1	2.2	2.3	2.4	2.5	2.6	2.8	2.9	3.1	3.2	3.4	3.5	3.7	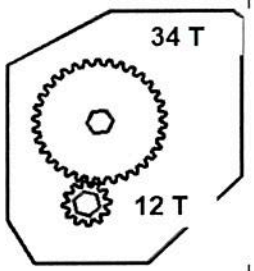
Triflurex 10G		2.1	2.2	2.3	2.4	2.5	2.7	2.8	2.9	3.1	3.2	3.4	3.5	3.7	3.9	4.1	
Rival 10G, Dual IIG Magnum, Ramrod 20, Force 3G		2.2	2.3	2.4	2.5	2.6	2.8	2.9	3.1	3.2	3.4	3.5	3.7	3.9	4.1	4.3	
Bonanza 10G, Counter 15G, Eptam 20GR, Surpass 20G		2.2	2.3	2.4	2.5	2.6	2.8	2.9	3.1	3.2	3.4	3.5	3.7	3.9	4.1	4.3	
Edge, Eradicane 25G, Lasso II		2.4	2.5	2.6	2.8	2.9	3.1	3.2	3.4	3.5	3.7	3.9	4.1	4.3	4.5	4.8	
Phorate 20G, Thimet 20G		2.9	3.1	3.2	3.4	3.5	3.7	3.9	4.1	4.3	4.5	4.8	5.0	5.2	5.5	5.8	
Treflan QR5(Cdn), Heritage		3.8	4.0	4.2	4.4	4.6	4.9	5.1	5.4	5.6	5.9	6.2	6.5	6.8	7.1	7.6	
Zorial 5G		3.9	4.1	4.3	4.5	4.8	5.0	5.2	5.5	5.8	6.1	6.4	6.7	7.0	7.3	7.8	
Dipel SG plus		4.8	5.0	5.3	5.6	5.8	6.1	6.4	6.7	7.1	7.4	7.8	8.1	8.6	9.0	9.5	
Sonalan 10G		3.6	3.8	3.9	4.2	4.3	4.6	4.8	5.0	5.3	5.5	5.8	6.1	6.4	6.7	7.1	**LOW RATIO**
Avadex BW, Avadex MicroActive, Fortress		3.7	4.0	4.1	4.4	4.6	4.8	5.0	5.3	5.5	5.8	6.1	6.4	6.7	7.0	7.5	
Advance 10G, Fargo, Buckle, Treflan TR10(USA)		3.7	4.0	4.1	4.4	4.6	4.8	5.0	5.3	5.5	5.8	6.1	6.4	6.7	7.0	7.5	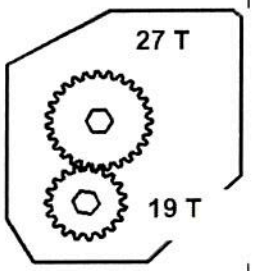
Triflurex 10G		4.1	4.4	4.6	4.8	5.0	5.3	5.5	5.8	6.1	6.4	6.7	7.0	7.4	7.8	8.2	
Rival 10G, Dual IIG Magnum, Ramrod 20, Force 3G		4.3	4.6	4.8	5.0	5.3	5.6	5.8	6.1	6.4	6.7	7.1	7.4	7.8	8.1	8.6	
Bonanza 10G, Counter 15G, Eptam 20GR, Surpass 20G		4.3	4.6	4.8	5.0	5.3	5.6	5.8	6.1	6.4	6.7	7.1	7.4	7.8	8.1	8.6	
Edge, Eradicane 25G, Lasso II		4.8	5.1	5.3	5.6	5.8	6.1	6.4	6.7	7.1	7.4	7.8	8.2	8.6	9.0	9.5	
Phorate 20G, Thimet 20G		5.8	6.1	6.4	6.8	7.1	7.4	7.8	8.2	8.6	9.0	9.5	9.9	10.5	10.9	11.6	
Treflan QR5(Cdn), Heritage		7.6	8.0	8.4	8.8	9.2	9.7	10.2	10.7	11.2	11.7	12.4	12.9	13.6	14.2	15.1	
Zorial 5G		7.8	8.2	8.6	9.1	9.5	10.0	10.5	11.0	11.5	12.1	12.7	13.3	14.0	14.6	15.5	
Dipel SG plus		9.5	10.0	10.5	11.1	11.6	12.2	12.8	13.4	14.1	14.7	15.5	16.2	17.1	17.9	18.9	

USE THIS CHART AS A GUIDE ONLY, CALIBRATE YOUR APPLICATOR.

Product Flow Rates in lbs/acre

Jul-16

Valmar 1655, 2055, 2455, 3255 IM, 245 PT, 245TM, 242TM, 1255 PT, 6600/7600 PT, 1255 TR, 1255 IM, 5500PT

Red roller - 1/4 in. gap / Grey Roller - 1/8 in. gap

PESTICIDE	GEARBOX SETTING																GEARBOX INPUT RATIO
	NO. 1		NO. 2		NO. 3		NO. 4		NO. 5		NO. 6		NO. 7		NO. 8		
	A	B	A	B	A	B	A	B	A	B	A	B	A	B	A	B	
Sonalan 10G	7.2		7.6	7.9	8.4	8.8	9.2	9.7	10.1	10.7	11.2	11.7	12.3	13.0	13.5	14.3	MEDIUM RATIO
Avadex BW, Avadex MicroActive, Fortress	7.6		8.0	8.3	8.8	9.2	9.7	10.2	10.7	11.2	11.7	12.3	12.9	13.6	14.2	15.1	
Advance 10G, Fargo, Buckle, Treflan TR10(USA)	7.6		8.0	8.3	8.8	9.2	9.7	10.2	10.7	11.2	11.7	12.3	12.9	13.6	14.2	15.1	
Triflurex 10G	8.3		8.8	9.2	9.7	10.1	10.7	11.2	11.8	12.3	12.9	13.6	14.2	15.0	15.7	16.6	
Rival 10G, Dust IIG Magnum, Ramrod 20, Force 3G	8.7		9.3	9.7	10.2	10.7	11.2	11.8	12.3	13.0	13.6	14.3	14.9	15.8	16.5	17.4	
Bonanza 10G, Counter 15G, Eptam 20GR, Surpass 20G	8.7		9.3	9.7	10.2	10.7	11.2	11.7	12.3	13.0	13.6	14.3	14.9	15.8	16.4	17.4	
Edge, Eradicane 25G, Lasso II	9.6		10.2	10.6	11.2	11.7	12.4	13.0	13.6	14.3	15.0	15.7	16.5	17.4	18.1	19.2	
Phorate 20G, Thimet 20G	11.7		12.4	12.9	13.7	14.3	15.0	15.7	16.5	17.4	18.2	19.1	20.0	21.1	22.0	23.3	
Treflan QR5(Cdn), Heritage	15.3		16.2	16.9	17.8	18.6	19.6	20.5	21.6	22.6	23.7	25.0	26.1	27.6	28.8	30.4	19 T / 27 T
Zorial 5G	15.7		16.6	17.3	18.3	19.1	20.1	21.1	22.2	23.3	24.4	25.7	26.8	28.3	29.6	31.3	
Dipel SG plus	19.2		20.3	21.2	22.4	23.4	24.6	25.8	27.1	28.4	29.8	31.3	32.8	34.6	36.1	38.2	
Sonalan 10G	14.3		15.2	15.8	16.7	17.5	18.4	19.3	20.2	21.2	22.3	23.4	24.5	25.8	27.0	28.6	HIGH RATIO
Avadex BW, Avadex MicroActive, Fortress	15.1		15.9	16.6	17.6	18.4	19.3	20.2	21.3	22.3	23.4	24.6	25.7	27.2	28.3	30.0	
Advance 10G, Fargo, Buckle, Treflan TR10(USA)	15.1		15.9	16.6	17.6	18.4	19.3	20.2	21.3	22.3	23.4	24.6	25.7	27.2	28.3	30.0	
Triflurex 10G	16.6		17.6	18.3	19.4	20.2	21.3	22.3	23.4	24.6	25.8	27.1	28.4	29.9	31.2	33.1	
Rival 10G, Dust IIG Magnum, Ramrod 20, Force 3G	17.4		18.4	19.3	20.3	21.2	22.4	23.4	24.6	25.8	27.1	28.5	29.8	31.4	32.8	34.7	
Bonanza 10G, Counter 15G, Eptam 20GR, Surpass 20G	17.4		18.4	19.2	20.3	21.2	22.4	23.4	24.6	25.8	27.1	28.5	29.8	31.4	32.8	34.7	
Edge, Eradicane 25G, Lasso II	19.2		20.3	21.2	22.4	23.4	24.7	25.8	27.1	28.5	29.8	31.4	32.8	34.7	36.2	38.3	
Phorate 20G, Thimet 20G	23.4		24.7	25.8	27.2	28.5	30.0	31.4	33.0	34.6	36.3	38.2	39.9	42.1	44.0	46.5	
Treflan QR5(Cdn), Heritage	30.5		32.2	33.7	35.5	37.1	39.1	41.0	43.0	45.1	47.3	49.8	52.1	54.9	57.3	60.7	12 T / 34 T
Zorial 5G	31.3		33.1	34.6	36.5	38.2	40.2	42.1	44.2	46.4	48.6	51.2	53.5	56.5	58.9	62.4	
Dipel SG plus	38.2		40.5	42.2	44.6	46.6	49.0	51.4	53.9	56.6	59.3	62.5	65.3	68.9	71.9	76.2	

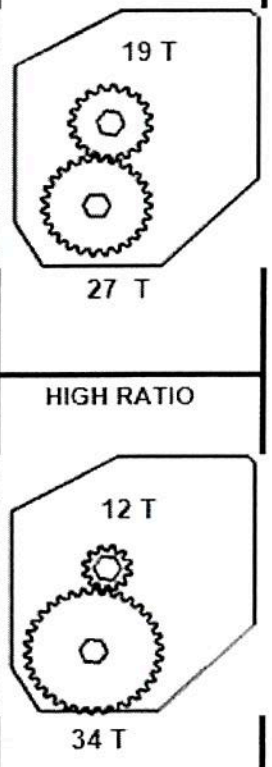

USE THIS CHART AS A GUIDE ONLY, CALIBRATE YOUR APPLICATOR.

Flow Rates in lbs/acre for RED ROLLER

Jul-16

Valmar 1655, 2055, 3255 IM, 245 PT, 245TM, 242TM, 1255 PT, 6600/7600/8600 PT, 1255 TR, 1255 IM, 5500PT

Red roller - 1/4 in. gap (1/8 in. gap for Canola)

FORAGE		GEARBOX SETTING																GEARBOX INPUT RATIO
		NO. 1		NO. 2		NO. 3		NO. 4		NO. 5		NO. 6		NO. 7		NO. 8		
		A	B	A	B	A	B	A	B	A	B	A	B	A	B	A	B	
Argentine Canola; Wester Canola		4.0		4.2	4.4	4.6	4.8	5.1	5.3	5.6	5.9	6.2	6.5	6.8	7.2	7.5	7.9	ULTRA LOW RATIO
Kentucky Bluegrass	15	0.8		0.8	0.9	0.9	1.0	1.0	1.1	1.1	1.2	1.2	1.3	1.4	1.4	1.5	1.6	
Creeping Red Fescue	18	0.9		1.0	1.0	1.1	1.1	1.2	1.2	1.3	1.4	1.4	1.5	1.6	1.7	1.7	1.8	
Crested Wheatgrass		1.2		1.2	1.3	1.4	1.4	1.5	1.6	1.7	1.7	1.8	1.9	2.0	2.1	2.2	2.3	
Perennial Ryegrass	22	1.5		1.6	1.6	1.7	1.8	1.9	2.0	2.1	2.2	2.3	2.4	2.5	2.7	2.8	3.0	
Timothy	36	2.1		2.2	2.3	2.5	2.6	2.7	2.8	3.0	3.1	3.3	3.4	3.6	3.8	4.0	4.2	
Reed Canary Grass	30	2.5		2.7	2.8	2.9	3.1	3.2	3.4	3.5	3.7	3.9	4.1	4.3	4.5	4.7	5.0	
Birdsfoot Trefoil	49	3.2		3.4	3.5	3.7	3.9	4.1	4.3	4.5	4.7	4.9	5.2	5.4	5.7	6.0	6.3	
Alfalfa	50	3.9		4.1	4.3	4.5	4.7	4.9	5.2	5.4	5.7	6.0	6.3	6.6	6.9	7.2	7.7	
Clover, Alsike	52	4.5		4.8	5.0	5.3	5.5	5.8	6.1	6.4	6.7	7.0	7.4	7.7	8.2	8.5	9.0	
Clover, Red	51	4.7		5.0	5.2	5.5	5.8	6.1	6.4	6.7	7.0	7.4	7.7	8.1	8.5	8.9	9.4	
Millet, Crown	46	6.5		6.9	7.2	7.6	7.9	8.3	8.7	9.2	9.6	10.1	10.6	11.1	11.7	12.2	12.9	
Argentine Canola; Wester Canola		7.9		8.4	8.8	9.2	9.7	10.2	10.7	11.2	11.8	12.3	13.0	13.6	14.3	14.9	15.8	LOW RATIO
Kentucky Bluegrass	15	1.6		1.7	1.8	1.8	1.9	2.0	2.1	2.2	2.3	2.5	2.6	2.7	2.9	3.0	3.2	
Creeping Red Fescue	18	1.8		1.9	2.0	2.1	2.2	2.4	2.5	2.6	2.7	2.8	3.0	3.1	3.3	3.5	3.7	
Crested Wheatgrass		2.3		2.5	2.6	2.7	2.9	3.0	3.1	3.3	3.5	3.6	3.8	4.0	4.2	4.4	4.7	
Perennial Ryegrass	22	3.0		3.1	3.3	3.5	3.6	3.8	4.0	4.2	4.4	4.6	4.9	5.1	5.4	5.6	5.9	
Timothy	36	4.2		4.5	4.6	4.9	5.1	5.4	5.7	5.9	6.2	6.5	6.9	7.2	7.6	7.9	8.4	
Reed Canary Grass	30	5.0		5.3	5.5	5.8	6.1	6.4	6.7	7.1	7.4	7.8	8.2	8.6	9.0	9.4	10.0	
Birdsfoot Trefoil	49	6.3		6.7	7.0	7.4	7.7	8.1	8.5	9.0	9.4	9.9	10.4	10.8	11.4	11.9	12.6	
Alfalfa	50	7.7		8.1	8.5	9.0	9.4	9.9	10.3	10.8	11.4	11.9	12.5	13.1	13.8	14.4	15.3	
Clover, Alsike	52	9.0		9.6	10.0	10.5	11.0	11.6	12.1	12.7	13.4	14.0	14.8	15.4	16.3	17.0	18.0	
Clover, Red	51	9.4		10.0	10.4	11.0	11.5	12.1	12.7	13.3	14.0	14.7	15.4	16.1	17.0	17.8	18.8	
Millet, Crown	46	12.9		13.7	14.3	15.1	15.8	16.6	17.4	18.2	19.2	20.1	21.1	22.1	23.3	24.3	25.8	

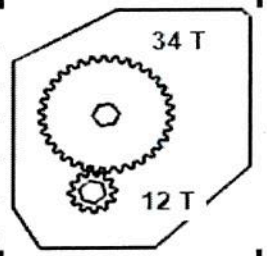

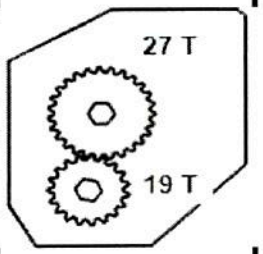

USE THIS CHART AS A GUIDE ONLY. CALIBRATE YOUR APPLICATOR.

Flow Rates in lbs/acre for RED ROLLER

Jul-16

Valmar 1655, 2055, 3255 IM, 245 PT, 245TM, 242TM, 1255 PT, 6600/7600/8600 PT, 1255 TR, 1255 IM, 5500PT

Red roller - 1/4 in. gap (1/8 in. gap for Canola)

FORAGE		GEARBOX SETTING																GEARBOX INPUT RATIO
		NO. 1		NO. 2		NO. 3		NO. 4		NO. 5		NO. 6		NO. 7		NO. 8		
		A	B	A	B	A	B	A	B	A	B	A	B	A	B	A	B	
Argentine Canola; Wester Canola		16.0	17.0	17.7	18.7	19.5	20.6	21.5	22.6	23.7	24.9	26.2	27.4	28.9	30.1	31.9		MEDIUM RATIO
Kentucky Bluegrass	15	3.2	3.4	3.5	3.7	3.9	4.1	4.3	4.5	4.7	5.0	5.2	5.5	5.8	6.0	6.4		
Creeping Red Fescue	18	3.7	3.9	4.1	4.3	4.5	4.8	5.0	5.2	5.5	5.8	6.1	6.3	6.7	7.0	7.4		
Crested Wheatgrass		4.7	5.0	5.2	5.5	5.8	6.1	6.4	6.7	7.0	7.3	7.7	8.1	8.5	8.9	9.4		
Perennial Ryegrass	22	6.0	6.4	6.6	7.0	7.3	7.7	8.1	8.5	8.9	9.3	9.8	10.3	10.8	11.3	12.0		
Timothy	36	8.5	9.0	9.4	9.9	10.4	10.9	11.4	12.0	12.6	13.2	13.9	14.5	15.3	16.0	16.9		
Reed Canary Grass	30	10.1	10.7	11.2	11.8	12.3	13.0	13.6	14.3	15.0	15.7	16.5	17.3	18.3	19.0	20.2		
Birdsfoot Trefoil	49	12.8	13.6	14.2	14.9	15.6	16.4	17.2	18.1	19.0	19.9	20.9	21.9	23.1	24.1	25.5		
Alfalfa	50	15.5	16.4	17.1	18.1	18.9	19.9	20.8	21.9	23.0	24.1	25.3	26.5	28.0	29.2	30.9		
Clover, Alsike	52	18.2	19.3	20.1	21.3	22.2	23.4	24.5	25.7	27.0	28.3	29.8	31.2	32.9	34.3	36.3		
Clover, Red	51	19.1	20.2	21.1	22.3	23.3	24.5	25.7	26.9	28.3	29.6	31.2	32.6	34.4	35.9	38.0		
Millet, Crown	46	26.1	27.6	28.8	30.4	31.8	33.5	35.1	36.8	38.7	40.5	42.7	44.6	47.1	49.1	52.0		
Argentine Canola; Wester Canola		31.9	33.8	35.3	37.2	38.9	41.0	42.9	45.1	47.3	49.6	52.2	54.6	57.6	60.1	63.6		HIGH RATIO
Kentucky Bluegrass	15	6.4	6.8	7.1	7.4	7.8	8.2	8.6	9.0	9.5	9.9	10.4	10.9	11.5	12.0	12.7		
Creeping Red Fescue	18	7.4	7.8	8.2	8.6	9.0	9.5	9.9	10.4	11.0	11.5	12.1	12.6	13.3	13.9	14.7		
Crested Wheatgrass		9.4	10.0	10.4	11.0	11.5	12.1	12.7	13.3	14.0	14.6	15.4	16.1	17.0	17.7	18.8		
Perennial Ryegrass	22	12.0	12.7	13.2	14.0	14.6	15.4	16.1	16.9	17.7	18.6	19.6	20.5	21.6	22.5	23.9		
Timothy	36	16.9	17.9	18.7	19.7	20.6	21.7	22.8	23.9	25.1	26.3	27.7	28.9	30.5	31.9	33.7		
Reed Canary Grass	30	20.2	21.4	22.3	23.5	24.6	25.9	27.1	28.5	29.9	31.3	33.0	34.5	36.4	38.0	40.2		
Birdsfoot Trefoil	49	25.5	27.0	28.2	29.8	31.1	32.8	34.3	36.1	37.9	39.7	41.8	43.6	46.1	48.1	50.9		
Alfalfa	50	30.9	32.7	34.1	36.0	37.7	39.7	41.6	43.6	45.8	48.0	50.5	52.8	55.8	58.2	61.6		
Clover, Alsike	52	36.4	38.5	40.2	42.4	44.3	46.7	48.9	51.3	53.9	56.5	59.4	62.1	65.6	68.4	72.5		
Clover, Red	51	38.0	40.3	42.0	44.4	46.4	48.8	51.2	53.7	56.4	59.1	62.2	65.0	68.6	71.6	75.8		
Millet, Crown	46	52.0	55.1	57.5	60.7	63.4	66.8	70.0	73.5	77.1	80.8	85.1	88.9	93.9	98.0	103.7		

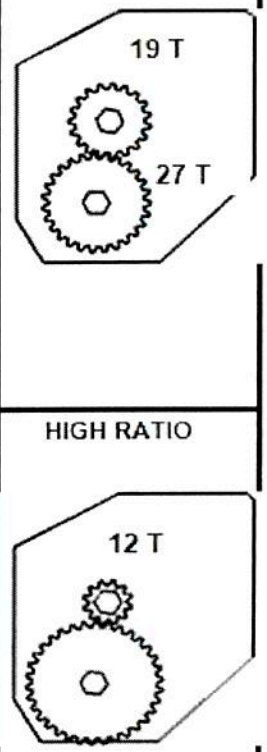

USE THIS CHART AS A GUIDE ONLY, CALIBRATE YOUR APPLICATOR.

New Product Calibration

When applying product that is either not listed on the Product Flow Rate Charts (such as grass mixtures) or that is inconsistent with the charted values, it is necessary to create a flow rate chart. Use the following procedure to prepare flow rates for all possible gearbox settings.

Calibration Set-up

Follow the same procedure as given at the beginning of this chapter.

Calibration

1. Set the gearbox to **Low Ratio, Range B, Speed No. 8**. At this setting the gearbox input to output ratio is 1 to 1.
2. Turn the crank the number of turns indicated in the chart at the beginning of this chapter.
3. Weigh the calibration containers. Subtract the weight of the empty containers to find the actual application rate in pounds per acre at the gearbox setting indicated in Step 1.
4. Record this weight on the blank Product Flow Rate Charts on the next two pages in the Calibration Weight column.
5. Multiply this calibration weight by the Gearbox Adjustment Factors listed on the chart in order to calculate the actual application rate in pounds per acre for all the other gearbox settings.

Example Calculation (Table 5-1)

A grass mixture is to be applied at 1.8 pounds per acre. A calibration was performed in which 6 pounds of product was collected.

Therefore, the application rate was 6 lbs/acre in Low Ratio, Range B, Speed No. 8. This weight was recorded in the Calibration Weight column of the blank charts. This weight was then multiplied by each Gearbox Adjustment Factor in the chart to calculate what the flow rate would be at all the other gearbox settings. It was found that Ultra Low Ratio, Range B, Speed No. 3 was the correct setting for 1.8 pounds per acre of the grass mix.

The gearbox was set to Ultra Low Ratio, Range B, Speed No. 3 and an applicator calibration performed as a final check.

Product Flow Rate Chart in lbs / Acre																	
Metering Gearbox Setting																	
Product		No. 1		No. 2		No. 3		No. 4		No. 5		No. 6		No. 7		No. 8		Input Ratio
		A	B	A	B	A	B	A	B	A	B	A	B	A	B	A	B	
Gearbox Adjustment Factor			.25	.26	.28	.29	.30	.32	.34	.35	.37	.39	.41	.43	.45	.47	.50	Ultra Low Ratio
Product	Cal. Weight																	
XYZ	6		1.5	1.6	1.7	1.7	1.8*	1.9	2.0	2.1	2.2	2.3	2.5	2.6	2.7	2.8	3.0	

Table 5:1: Flow Rate Example Calculation

*Calculated from .30 X 6 = 1.8 lbs/acre

Product Flow Rate Chart in lbs/acre

February 2001

PRODUCT		GEARBOX SETTING														GEARBOX INPUT RATIO
		NO. 1		NO. 2		NO. 3		NO. 4		NO. 5		NO. 6		NO. 7		NO. 8		
		A	B	A	B	A	B	A	B	A	B	A	B	A	B	A	B	
Gearbox Adjustment Factor			.25	.26	.28	.29	.30	.32	.34	.35	.37	.39	.41	.43	.45	.47	.50	ULTRA LOW RATIO
Product	Cal. Weight																	
Gearbox Adjustment Factor			.50	.53	.55	.58	.61	.64	.67	.70	.74	.77	.81	.85	.90	.94	1.00	LOW RATIO
Product	Cal. Weight																	

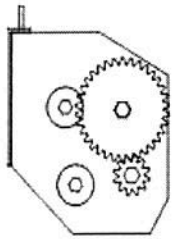

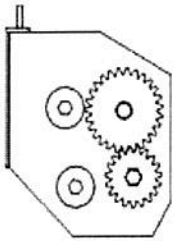

Product Flow Rate Chart in lbs/acre

February 2001

PRODUCT		GEARBOX SETTING																GEARBOX INPUT RATIO
		NO. 1		NO. 2		NO. 3		NO. 4		NO. 5		NO. 6		NO. 7		NO. 8		
		A	B	A	B	A	B	A	B	A	B	A	B	A	B	A	B	
Gearbox Adjustment Factor			1.01	1.07	1.11	1.17	1.23	1.29	1.35	1.42	1.49	1.56	1.65	1.72	1.82	1.89	2.01	**MEDIUM RATIO**
Product	Cal. Weight																	
Gearbox Adjustment Factor			2.01	2.13	2.22	2.34	2.45	2.58	2.70	2.83	2.98	3.12	3.28	3.43	3.62	3.78	4.00	**HIGH RATIO**
Product	Cal. Weight																	

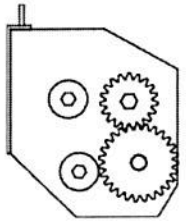

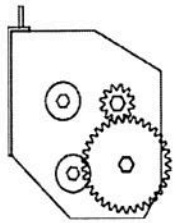

6 – Adjustments & Service

This section provides information on daily and periodical maintenance of your applicator. A recommended service interval is listed with each item. Be sure to service all these components after any lengthy period of non-use You are responsible for the **Safe** operation and maintenance of your applicator. Ensure that you and anyone else who is going to operate, maintain or work on or around the applicator be familiar with the operating and maintenance procedures and related safety information contained in this manual.

Safety

1. Refer to the Operator's Manual for your tillage equipment. Follow all operating, maintenance and safety information in the manual.
2. Place the implement on a firm level surface. Lower all sections of the implement.
3. Exercise extreme caution when working around or with high-pressure hydraulic systems. Depressurize the system when connecting or disconnecting the hose couplings.
4. Wear heavy gloves and a face shield for eye protection when searching for suspected hydraulic leaks. A high-pressure concentrated stream of hydraulic fluid can pierce the skin. If such happens, seek immediate medical attention, as infection and toxic reaction could develop.
5. Do not attempt any adjustments or maintenance to any system of the Valmar Applicator when the implement is in motion.
6. Make sure all guards and shields are in place when the applicator is being operated.
7. Never wear ill-fitting, baggy or frayed clothing when working on any drive system components.
8. Store and transfer gasoline, solvents, cleaners or any flammable liquids only in Safety Standard approved containers.

Electric Clutches

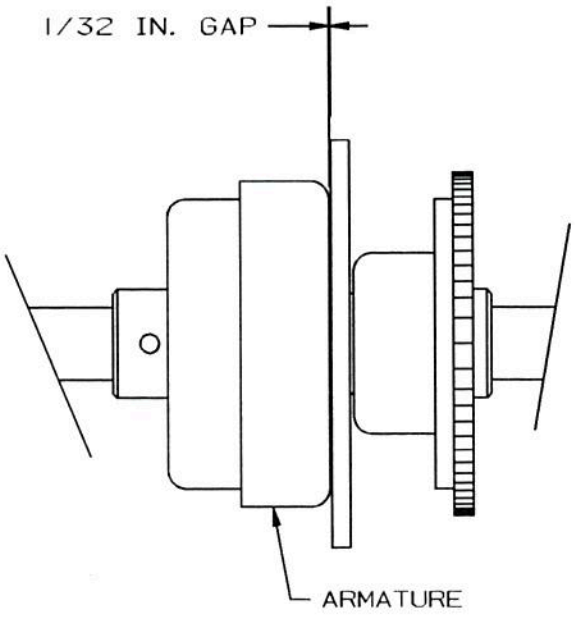

Figure 6 - 1: Clutches

Clutches Do Not Release

The clutches should release when electrical power is shut off. If metering rollers continue to turn, inspect clutches for imprope r assembly. Check the following:

1. Check bearings for corrosion, damage or failure. They can cause the clutch to engage improperly or drag.
2. Insufficient gap at clutch armature. If the clutch armature contacts the rotor ring when power is disconnected, add a spacer ring to provide the 1/32 inch clearance between the armature and rotor as indicated in the diagram.

Clutches Do Not Engage

Disengage ground drive wheel. Energize the clutches by turning the control unit ON. Use another 12 volt source if tractor is not attached. Rotate wheel by hand and observe clutches to see if they engage. If they do not engage

1. Check for electromagnetic attraction. Touch the armature using a wrench or screwdriver to see if it attracts metal. If there is no magnetic pull, check the following:
    a) Check the control unit. The Power Switch must be ON. Check the Normal/Alternate Switch to make sure it is in the proper position.
    b) Check the fuses to the control unit. Refer to Fuses in this section.
    c) Check connections to the power source (battery).
    d) Check all connections along harness.
    e) Check ohm resistant readout at clutch. It should be between 2.4 and 2.8 ohms at room temperature.

2. There is magnetic pull, but no clutch engagement. Check the following:
    a) Check gap in the clutch. A gap greater than 1/32 inch indicated in Figure 6-1 means the spacer ring should be removed.
    b) If there is no spacer ring and gap is greater than required, see your Valmar dealer.

Clutch Lockup (Fig. 6-2)

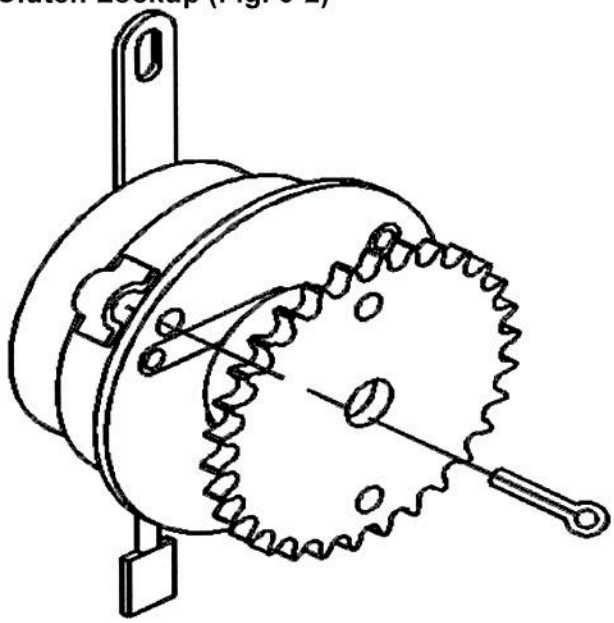

Figure 6 - 2: Clutch Lockup

The electromagnetic clutches can be manually engaged should an electrical failure by inserting a 1/8" dia. pin through both clutch halves as shown.

Gas Engine

Refer to the Honda engine Operator's Manual for correct engine maintenance procedures.

Centrifugal Clutch (Fig. 6-3)

The centrifugal clutch is secured to the engine using Loctite 609. Should only the bearing require replacement, do not remove the clutch assembly from the engine output shaft. This will prevent the breaking of the Loctite seal.

Bearing Replacement

The bearing can be replaced without removing the clutch from the engine as follows:

1. Remove the snap ring (5) and the pulley (4) from the clutch rotor and hub (1).
2. Remove one snap ring (2) which holds the bearing in place within the pulley and press out the bearing.
3. Reinstall the components in reverse order of removal. Install the new bearing by pressing on the inner race, not the balls of the bearing.

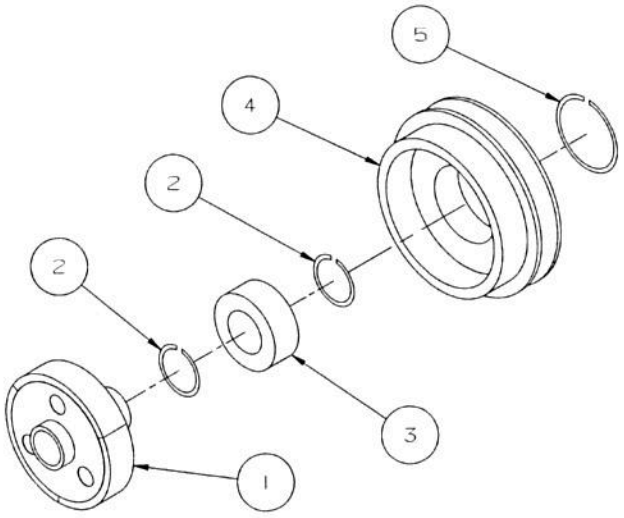

Figure 6 - 3: Bearing Replacement

Clutch Removal

If the clutch or pulley is damaged and needs to be completely removed from the engine, do so as follows:

1. Remove the retaining bolt and washer from the end of the crankshaft.
2. Heat the Loctite securing the clutch to 350 to 400 degrees F. Direct the heat to the connection point only. Do not overheat the crankshaft as this may weaken it.
3. Using a puller, remove the clutch from the engine while hot.

Clutch Reinstallation

1. Check the bearing seals for heat damage. Replace if necessary.
2. Remove old Loctite from the clutch and engine output shaft. Clean thoroughly using a chlorinated solvent. Wipe dry.
3. Apply Loctite 609 evenly to both mounting surfaces. Do not fill the keyway.
4. Install clutch to engine with the belt groove away from the engine. Wipe off excess Loctite.
5. Reinstall washer and retainer bolt. Do not Loctite the washer.
6. Cure Loctite for 6 hours at a temperature of 68 to 70 degrees F before operating. If temperature falls to 50 degrees F, allow 24 hours for curing.

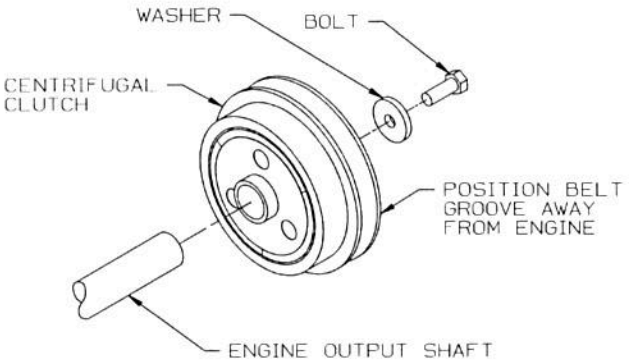

Figure 6 - 4: Clutch Installation

Fan Drive

1. Start up the fan and run at the recommended RPM until the manifold, venturis and hoses are blown dry by the airflow.
2. Check airflow at the house outlets with the fan running at operating pressure. If an outlet lacks sufficient air velocity, check the manifold venturis and hose for any blockage. Unplug as required.
3. Check that all bearings turn freely. Replace any that are rough or seized.
4. Check all hardware. Tighten all loose bolts and replace any that are missing. Use Grade 5 or better when replacing bolts.

Gearbox (Figure 6-5)

Top and Bottom Gear Cluster Alignment

If the top and bottom clusters do not align vertically, adjust by bending the range shift lever left or right until gears align.

Gearbox Speed Shifter Alignment

If the idler gear in the gearbox speed shifter does not line up (by detent) to the top and bottom gear clusters, adjust it as follows:

1. Disengage gearbox speed shifter from gear clusters.
2. Loosen setscrew on top shifter shaft.
3. Move to shifter shaft left or right, then tighten the setscrew.
4. Check idler gear alignment to both gear clusters. Repeat adjustment, if necessary.

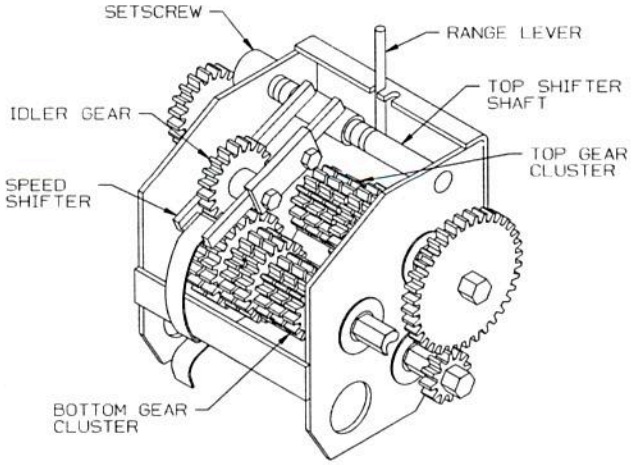

Figure 6 - 5: Gearbox Adjustments

Idler Gear Tension (Fig. 6-6)

Check the idler gear tension as noted below and adjust if necessary:

1. Set the gearbox at No. 1B and clip the idler gear in place. Ensure that the gear teeth engage the gear clusters.
2. The idler gear should *not* be free to slide back and forth *in the direction shown*. If it is, unclip the idler gear and loosen off the latch plate. Move the latch plate down until proper tension is achieved.
3. Repeat the above procedure for gearbox setting No. 8B.
4. Set the gearbox to No. 2A. Ensure that the idler gear can be engaged by hand without excessive force. Adjust as required and repeat steps 1 and 2.
5. Repeat step 3 for gearbox setting No. 8A.

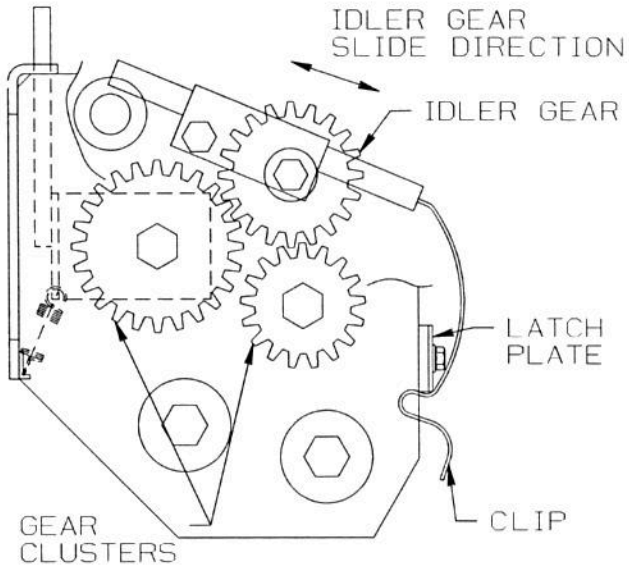

Figure 6 - 6: Idler Gear Tension

Manifold Pressure Alarm (Fig. 6-7)

The two electrical alarm contacts on the control unit can be adjusted by inserting a small philips head screwdriver into the small holes on the front face of the controller as indicated in Figure 6-7. The Low Pressure alarm is factory set at 10 inches of water column. The High Pressure alarm is factory set at 25.

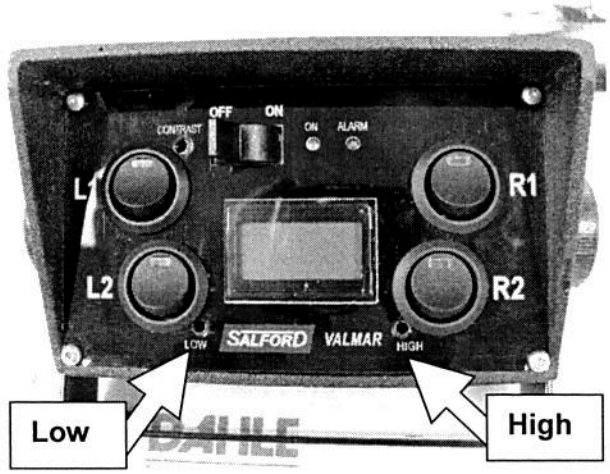

Figure 6 - 7: Manifold Pressure Alarm

Metering Rollers

The metering rollers should be removed, cleaned and inspected for damage on a daily basis. Grooving or flattening of the metering roller surface can drastically alter the metering rate. Damaged rollers must be replaced.

Keeping the applicator free from moisture will help to prevent product from building up on the rollers.

Metering Roller Gap (Fig. 6-8)

The gap between the metering roller and the metering lip is preset at the factory. Should the gap need adjustment, do so as follows:

1. Loosen the bolts securing each bearing housing to the bottom assembly.
2. Insert a ¼" spacer for the RED and GRAY rollers. If seeding canola with the RED roller, use a 1/8" spacer for more accurate application.
3. Tighten the bearing housing bolts. Remove the spacers.

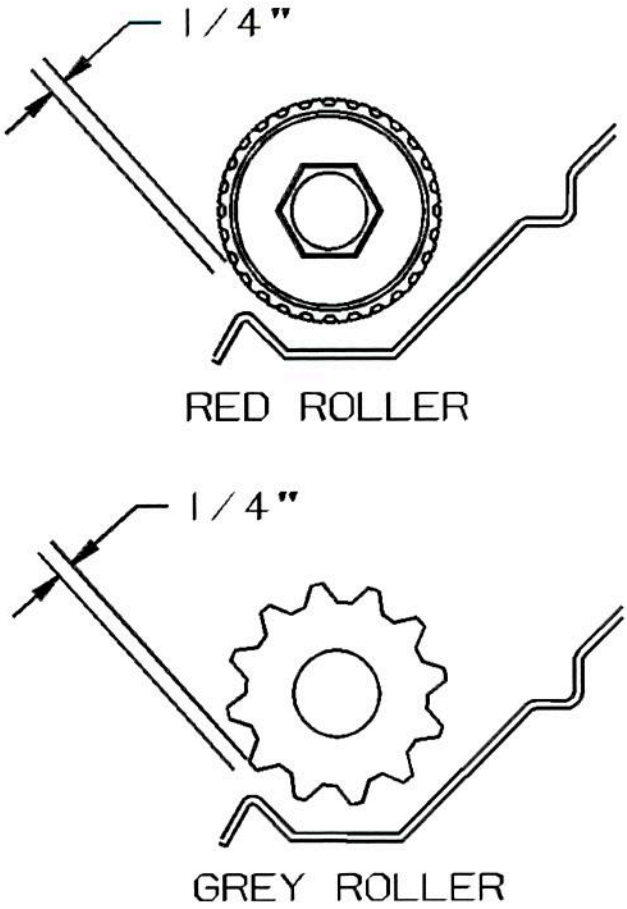

Figure 6 - 8: Metering Roller Gap

Metering Roller Cleaning (Figure 6-9)

Clean the metering rollers on a daily basis as follows:

1. Push down the shut-off plates if hopper is not empty.
2. Lower the manifold and install the funnels along with some collection containers. Release the bearing clips and remove the metering rollers.
3. Clean the metering rollers, metering roller area, bearing seats and venturis.

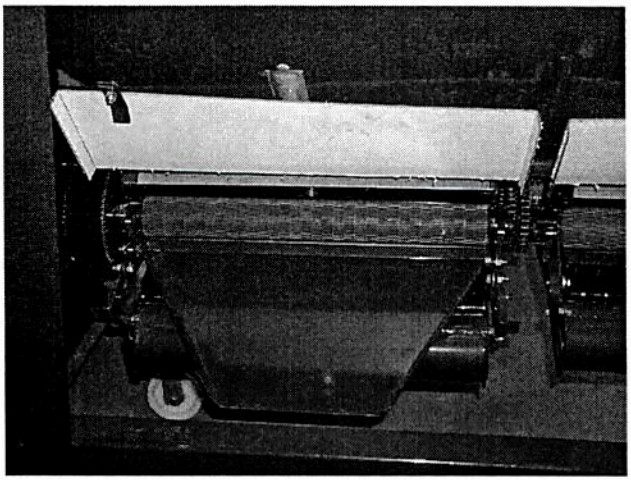

Figure 6 - 9: Metering Roller Cleaning

Keep the hopper clean and free of debris to ensure trouble-free operation. Do not leave product in the hopper overnight or longer as condensation may cause the product to cake up. Clean the hopper as follows:

1. Follow the instructions in the preceding section to remove the metering rollers
2. Open the shut-off plate to allow material to flow into the collection container(s).
3. Clean the hopper and bottom thoroughly.
4. Place the product in a sealed container and store indoors.

Lubrication

Bearings

Axle bearings should be lubricated once per season of use. Grease nipples can be found on the hubs.

Only sealed bearings are used elsewhere on the 246. They require no relubrication.

Chain drives

Lubricate with a recommended chain lubricant. Grease or heavy oil will attract dirt and dust.

Metering Gearbox

Lubricant all moving parts of the metering gear box with a "cleaner lubricant" such as penetrating oil. Grease or heavy oil will attract dirt and dust causing premature wear and difficult shifting.

Belt and Chain Adjustments

Proper V-belt and chain tension is critical to the efficient function and long wear of all drive systems. Belts and chains that are too tight, too slack or misaligned will wear prematurely.

Alignment

Periodically check the alignment of all pulleys and sprockets. Place a straight edge against them to see if belts and chains are in line and shafts are parallel. Turn the pulley or sprocket and check at different points for warping. Replace any damaged parts.

Fan Drive Belt (Fig. 6-10 & 6-11)

The correct fan belt tension is ½ inch of deflection when a 5 pound force is applied at the mid-point of the belt span.

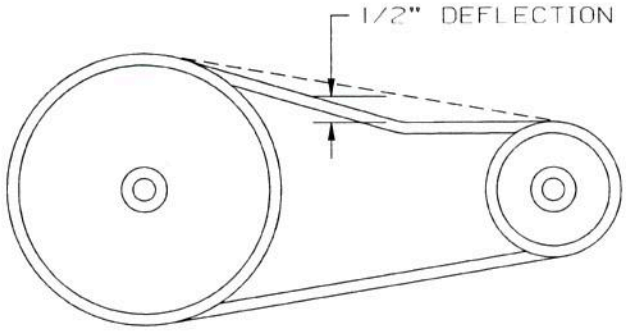

Figure 6 - 10: Fan Belt Tension

Adjust gas engine fan drive belt tension by rotating the tensioner pulley arm upwards or

downwards as shown in Figure 6-11. Tighten all bolts securely when tensioning is complete. Reinstall all shields when done.

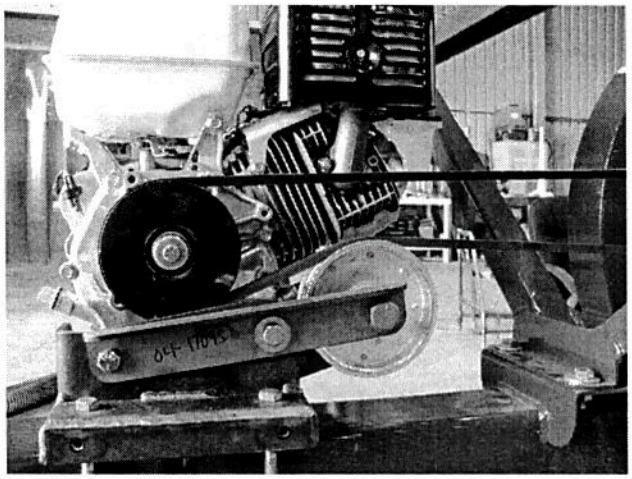

Figure 6 - 11: Fan Belt Tensioner Pulley

Chain Tension

Allow 2% slack (1/4" per foot) between shaft centers for proper chain tension, as measured at the mid-point of the chain span.

Tire Pressure

The ground drive tire and trailer tires should be inflated to 30 psi.

Post- Season Maintenance

Before storing the applicator after the work season, check the following areas:

1. Remove the metering rollers and clean them.
2. Clean the inside of the hopper, especially the bottom corners.
3. Purge the delivery system by running the fan at operating speed.
4. Lubricate all roller chains and the gearbox.
5. Touch up any paint scratches.
6. Store in a shed or cover with a waterproof tarpaulin.

Pre- Season maintenance

Before starting the season's work, check the following areas:

Gas Engine

1. Change the crankcase oil and replace the spark plug.
2. Clean the engine and all components thoroughly. Ensure that the throttle and choke operate freely.

Bearings

1. Inspect the fan bearing if equipped with a gas engine fan drive. Remove the fan cover, loosen the belt and push and pull on the one edge of the impellor.
2. Turn the metering system by hand. If there is any binding or dragging, replace the worn bearing(s).

Delivery System

1. Inspect the applicator for accumulation of debris. Clean if necessary.
2. Install the manifold pressure gauge. Run the fan to ensure it is working properly.
3. Run the fan at operating speed and check the air flow in each outlet.

Metering System

1. Disassemble the electric clutches and buff the internal surfaces with emery cloth. Reassemble to proper gap.
2. Inspect gearbox for proper gear alignment. Lubricate all moving parts.
3. Check roller chain and fan belt tension and alignment.
4. Be sure all sprockets are secured to a shaft. If the sprocket has been spinning, grind a flat spot on the shaft where the screw is located.
5. Check the metering roller gap.

7 - Troubleshooting

The Valmar Airflow system is a simple, accurate and reliable system which requires minimal maintenance.

Should you nonetheless encounter problems with your applicator, the following section lists their possible causes and solutions.

If the problem persists even after taking the steps to recommend in the section, call you Valmar dealer. Before you call, have this operator's manual and applicator serial number ready.

Problem	Cause	Solution
The rate of product being applied is lower than expected.	Product density has changed resulting in a discrepancy with the applicator charts.	Calibrate your applicator. Create a new chart.
	Mathematical error during calibration.	Recheck calculations.
	Mistake made while weighing calibration sample.	Weigh sample again.
	Actual acreage covered less than expected.	Recheck field size. Tractor wheel slippage may be causing incorrect odometer reading.
	Wrong gearbox setting.	Set gearbox correctly.
	Sprocket(s) slipping on shafts. Ground drive wheel is slipping. Misaligned shafts and sprockets or damaged bearings are causing the metering system to drag	Tighten sprocket set screws Align sprockets and shafts properly. Replace damaged bearings.

Problem	Cause	Solution
Product shooting out of the venture caused by back pressure.	Obstruction in delivery hoses.	Unplug hoses.
	Collapsed delivery hose.	Replace hose.
	Fan speed too low.	Increase fan speed to 17 inches water column pressure.
	Field speed too fast. Product is being metered into venturis faster than air flow can carry it.	Slow down.
Venturi filling up with product and spilling over	Plugged fan inlet.	Unplug inlet.
	Fan speed too low.	Increase fan speed to 17 inches water column pressure.
	Fan to manifold hose torn or not operating.	Replace hose.
	Fan not operating.	Engage the fan drive.
	Manifold pressure gauge giving inaccurate reading.	Replace manifold pressure gauge.
	Plugged manifold.	Clean out manifold.
	Product caking up venturi.	Clean venturi.
	Hot or humid weather.	
	Water hopper.	Clean out hopper
	Water in manifold.	Run fan to blow-dry the delivery system.

Problem	Cause	Solution
Product clings to the venturi due to static electricity.	An electrical charge builds up in the venturi causing the product to cling to the venturi. The product resists the suction created by the air stream.	Clear the venturi by pushing the product through the fan running. Wipe the venturi with an antistatic towel as used in clothes dryers. If the problem persists, the venturi has to be grounded to the manifold. Run a small wire, preferably copper, through the venturi cup and into the manifold as shown below. The wire must contact the manifold to ground out the electrical charge.

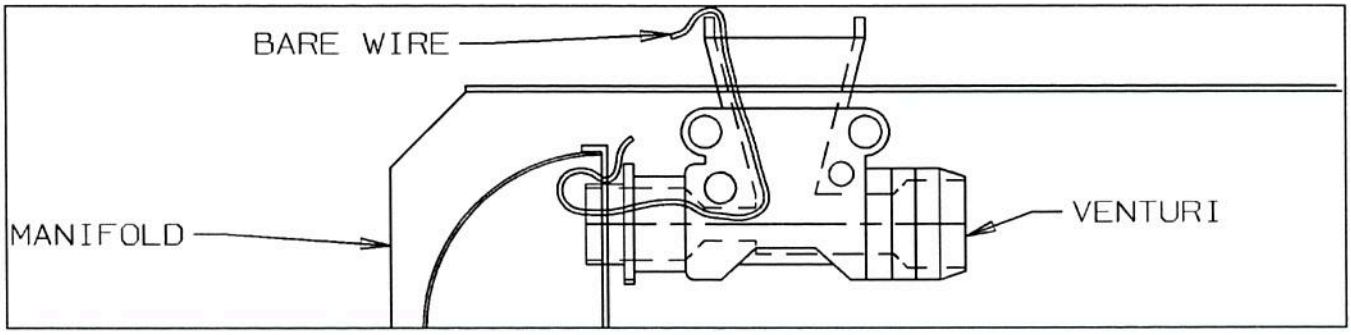

Problem	Cause	Solution
Clutches will not engage.	No electrical power to clutches.	Check power cable to battery. Check fuses. Check wiring harness and all connections.
	Dirt lodged between clutch halves.	Pull the clutch halves apart. Clean the contact surfaces and reset o proper gap.
	Gap between clutch halves is too wide.	The gap should be 1/32". Disassemble clutch and remove the space ring. See Adjustment and Service section for more information.

Problem	Cause	Solution
Speed Fan too slow.	Loose fan drive belt.	Adjust tension.
	Insufficient oil supply from tractor.	Check hydraulic oil flow specifications for the tractor. Ensure that the tractor hydraulic system is working properly.
	Seal worn or damaged by heat.	Replace seal.
Hydraulic Motor leaks.	Overpressure ruptured seal.	Replace seal.
	Contaminants damaged seal.	Replace seal. Ensure that oil supply is clean.

8 – Assembly and Options

Some assembly is required for certain components of the 246 PT.

Case Drain Coupler

Pioneer couplers are provided with the 246 PT for the pressure and return lines on the hydraulic fan drive.

The end user must purchase a case drain coupler that will connect with the case drain on their tractor hydraulic system. The case drain hose comes with a ½" NPT threaded end.

Failure to connect the case drain line to a zero pressure tank port will result in immediate motor seal failure.

Control Unit

Install the control unit in a place where it can be easily seen and operated. Connect the electrical cables as noted below:

1. Plug the end of the power cable with the triangular male Deutsch connector into the rear of the control unit.
2. Connect the WHITE wire with the ring terminal to the POSITIVE terminal on the battery. Connect the BLACK wire with the ring terminal to the NEGATIVE terminal on the battery.
3. Plug the rectangular male Deutsch connector for the cab cable into the rear of the control unit.
4. Run the cab cable out of the cab and connect the other end of it to the connector at the front of the hitch.
5. Switch the control unit on. Turn all clutches on. The clutch halves should lock together instantly. If not, consult the Adjustments and Service section.

Options

Valmar Airflo makes optional equipment designed to fit your applicator to particular applications or enhance its performance. This section provides basic information about the function of each option as well as reasons for using them. Detailed instructions for the assembly and installation of the options are contained in the kits themselves.

Gas Engine Fan Drive Kit

A gas engine fan drive kit is available for operators who need a fan that is driven by a gas engine, for use in situations where tractor hydraulic flow may be insufficient for a hydraulically driven fan, or where the applicator is pulled by a truck.

Note: A gas engine is not provided in this kit. A 9 horsepower engine (11.3898) is recommended.

Acre Counter

An acre counter is available for the 246 PT. This acre counter is a hub meter which bolts onto the ground drive wheel rim.

9- Specifications

Model No. 246PT

Hopper steel welded, painted with acrylic enamel.

Dimensions Height 87 inches, Length 223.5 inches,
Width 100 inches

Capacity 60 cubic feet; 2700 lbs at 45 lbs per cubic foot density.

Weight (Empty) 3100 pounds; hopper with hydraulic fan.

Gear Box Ratios 60 speed gearbox with 5% difference between settings.
Refer to the chart for more information on ratios.

Tires 4 – 3.75 Ground Drive Tire (Approx. 1280 revolutions per mile)
Trailer Tires: 14L 16.1
Inflate all tires to 30 psi

Engine Fan Drive Belt driven system. Belt size B83
9 hp Honda Engine with centrifugal clutch

Hydraulic Fan Drive Direct drive system
Rexroth 12 cc motor
Requires 10.5 US gallons per minute and case drain port

Metering Four metering rollers with shut of gate for each roller.
24 venturis. Manifold and venturis drop for easy calibration and emptying.

Electric Clutch 12 volt DC; 3.4 amps; 90 lbs torque capacity. Resistance is 2.4 to 2.8 ohms (cold). Four clutches for 4 section control of metering rollers and in-cab control unit.

Electrical Requirements 12 volt D.C.; 10 amps standard version

Operating Width 60 feet

No. 1		No. 2		No. 3		No. 4		No. 5		No. 6		No. 7		No. 8		
A	B	A	B	A	B	A	B	A	B	A	B	A	B	A	B	Input Gear
	.250	.265	.276	.292	.305	.321	.336	.353	.371	.388	.409	.427	.451	.471	.498	U. Low
	.498	.528	.551	.581	.608	.640	.670	.704	.739	.774	.815	.852	.899	.938	.993	Low
	1.007	1.066	1.112	1.174	1.227	1.292	1.353	1.421	1.492	1.563	1.645	1.720	1.816	1.895	2.006	Med.
	2.007	2.125	2.217	2.341	2.447	2.576	2.698	2.833	2.975	3.117	3.281	3.430	3.620	3.778	4.000	High

Metering Gearbox Ratios: (input to output shaft)

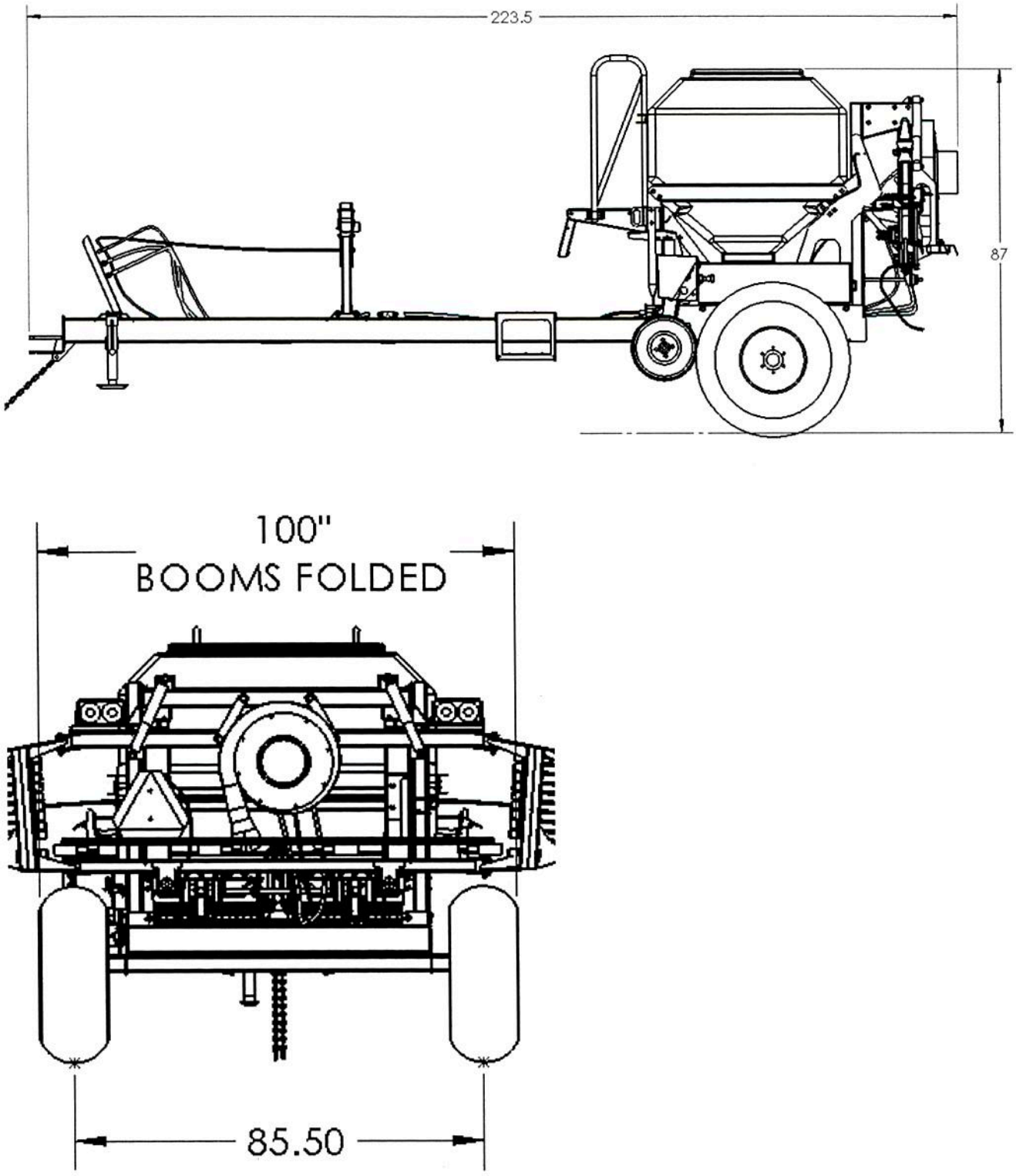

Figure 8- 1: Dimensions

Implement Harness Wiring

Ground = Black wire
Clutch R1 = Blue wire
Clutch R2 = Green wire
Clutch L1 = Yellow wire
Clutch L2 = White wire

Air Pressure Sensor – Red and Blue wires

10 – Parts

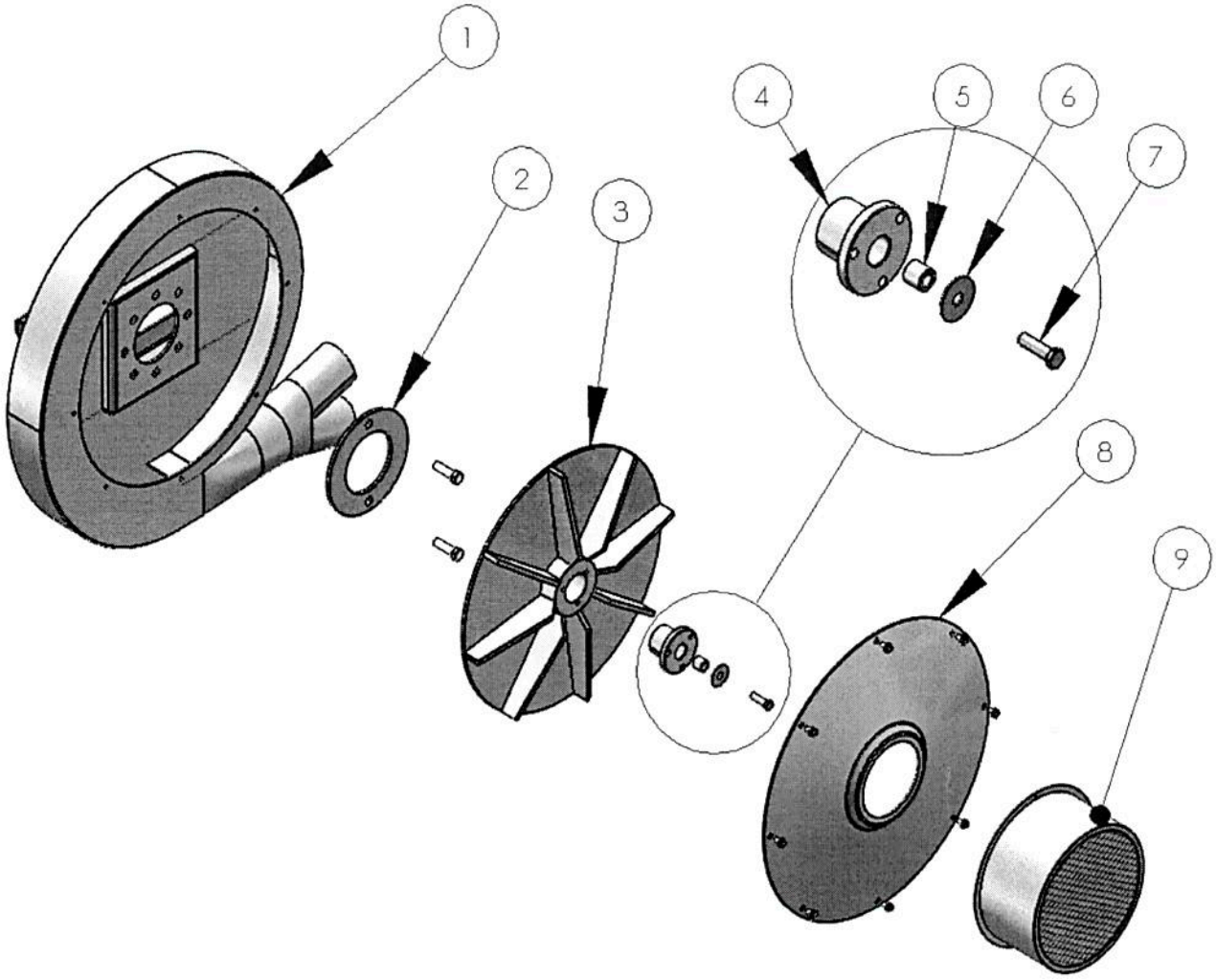

HYDRAULIC DRIVE FAN ASSEMBLY

ITEM	PART NO.	DESCRIPTION	QTY.
1.	03.16592	Fan Housing, 18"	1
2	04.16652	Ring – Fan Seal	1
3	19.260	Impellor, 18"	1
4	11.13615	Split Taper Bushing P1 X 25mm	1
5	23.13616	Spacer – ¾"	1
	23.13978	Spacer – 11/16"	1
	23.13979	Spacer – 5/8"	1
	23.13980	Spacer – 9/16"	1
6	17.8803	Flatwasher 3/8 X 1.5"	1
7	23.13617	HHCS M10 X 40mm	1
8	03.259	Fan Cover	1
9	03.755	Inlet Screen	1
10	12.17163	Fan Hose – 3" (to manifold)*	2
11	17.1856	Hose Clamp HS 48 (for 3" hose)*	4

The assembly requires one spacer (item 5) whose length varies depending on what is needed to achieve 1/8" clearance between impellor and fan cover.

*Not shown

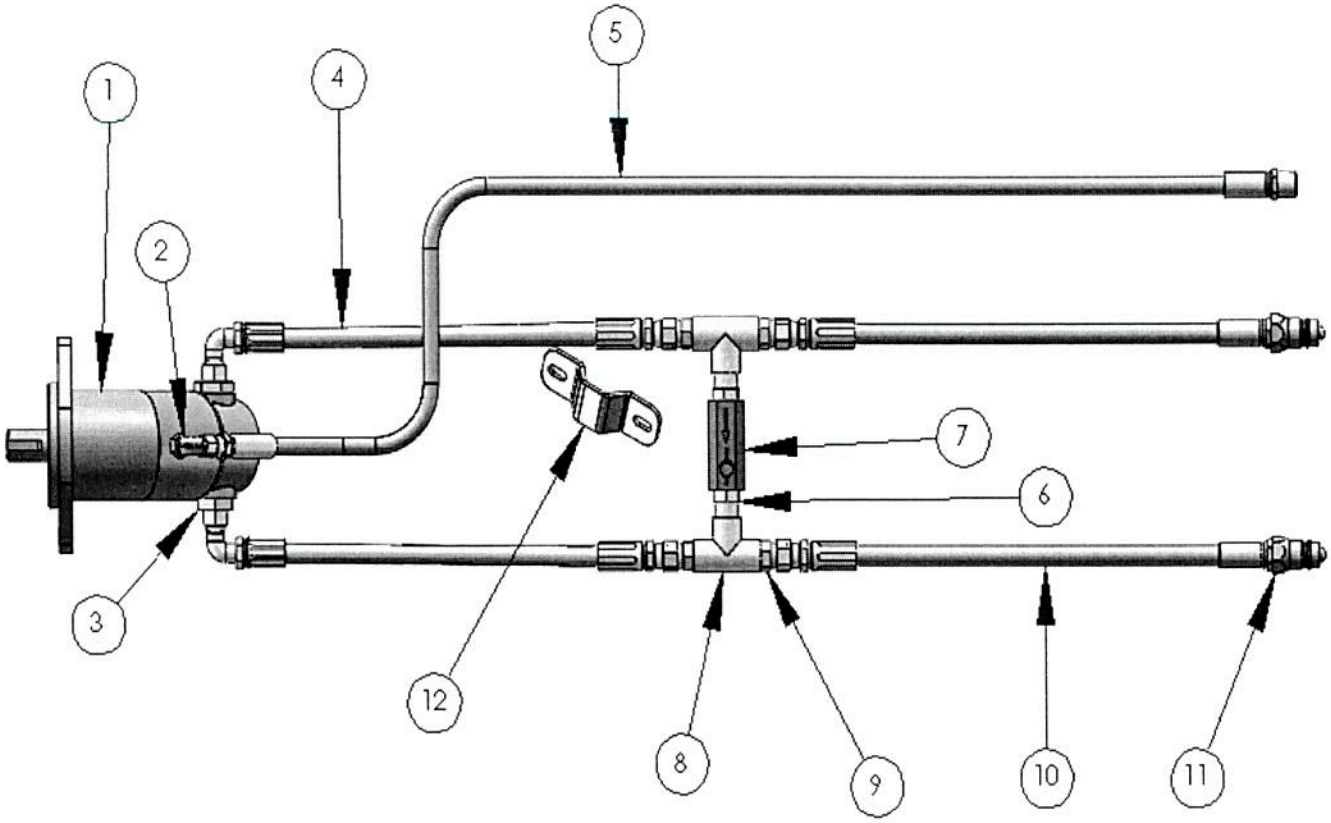
1
2
3
4
5
6
7
8
9
10
11
12

HYDRAULIC FAN DRIVE MOTOR ASSEMBLY

ITEM	PART NO.	DESCRIPTION	QTY.
1	13.13614	Motor – Rexroth 12 cc	1
2	13.11450	Fitting – 90 degree 06 ORB x 06 JIC	1
3	13.12401	Fitting – 08 JIC x 12 ORB	2
4	13.16994	Hose – Motor to Check Valve	2
5	13.16996	Hose – Case Drain	1
6	13.1675	Nipple – ½" NPT	2
7	13.244	Check Valve – ½" NPT	1
8	13.1832	Tee – ½" NPT female	2
9	13.245	Fitting – 08 JIC x ½" NPT	4
10	13.16995	Hose – Check Valve to Tractor	2
11	13.4464	Pioneer Coupler – ½"	2
12	04.14885	Bracket – Check Valve	2

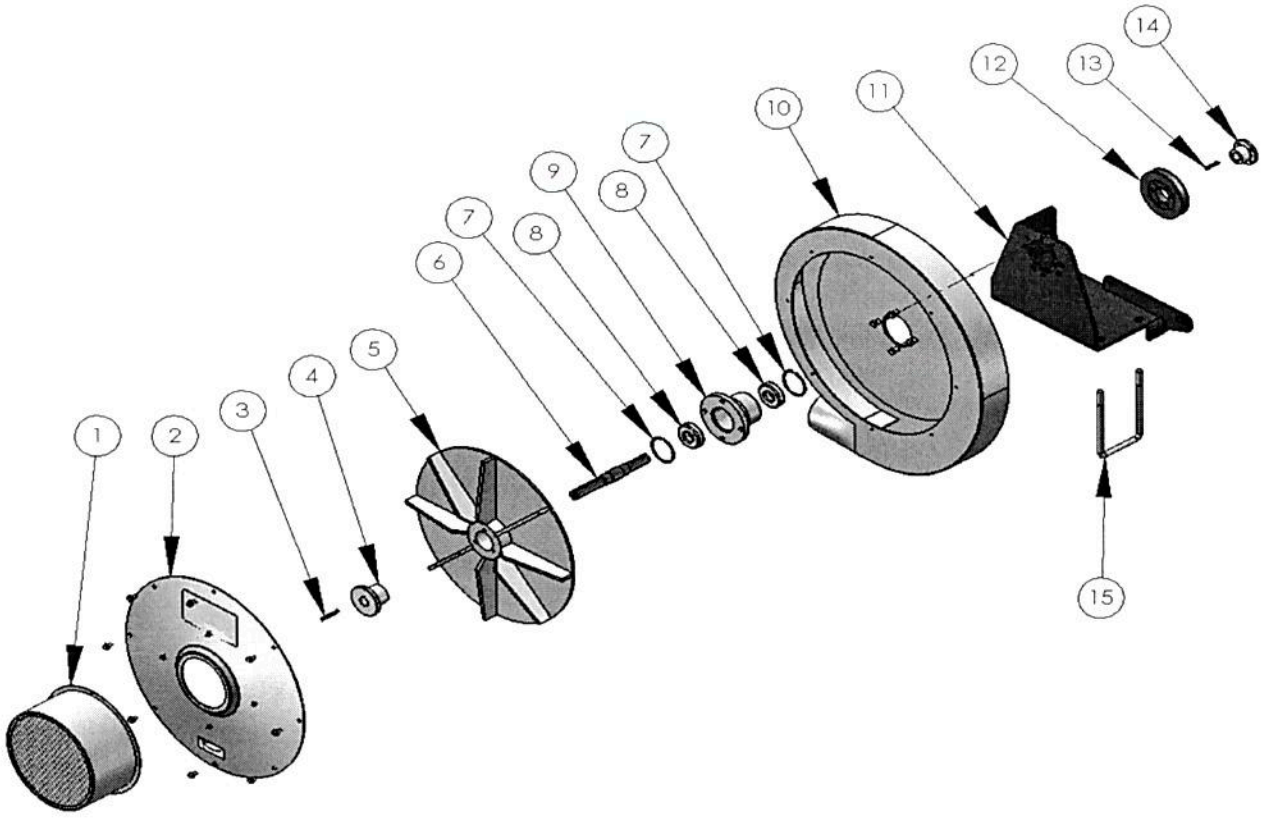
1
2
3
4
5
6
7
8
9
7
8
7
10
11
12
13
14
15

GAS ENGINE DRIVE FAN ASSEMBLY

ITEM	PART NO.	DESCRIPTION	QTY.
1.	03.755	Fan Screen	1
2	03.259	Fan Cover	1
3	17.6417	Key – 3/16" X 2"	1
4	11.6172	Split Taper Bushing P 7/8	1
5	19.260	Impellor – 18"	1
6	08.6192	Shaft – Fan Hub	1
7	17.3178	Snap Ring N5000-244	2
8	14.3177	Bearing – 6305-2RS-C3	2
9	19.3025	Housing – Fan Hub	1
10	03.5968	Fan Housing – 18"	1
11	03.17088	Fan Mount	1
12	11.555	Pulley – BK50H	1
13	17.3731	Key – 3/16" X 1 ½"	1
14	11.14551	Split Taper Bushing QTX 7/8 SG	1
15	17.17211	U Bolt ½ X 4 X 7 ¼	2
	02.6193	Fan Hub Assembly (inc. items 6 thru 9)	1

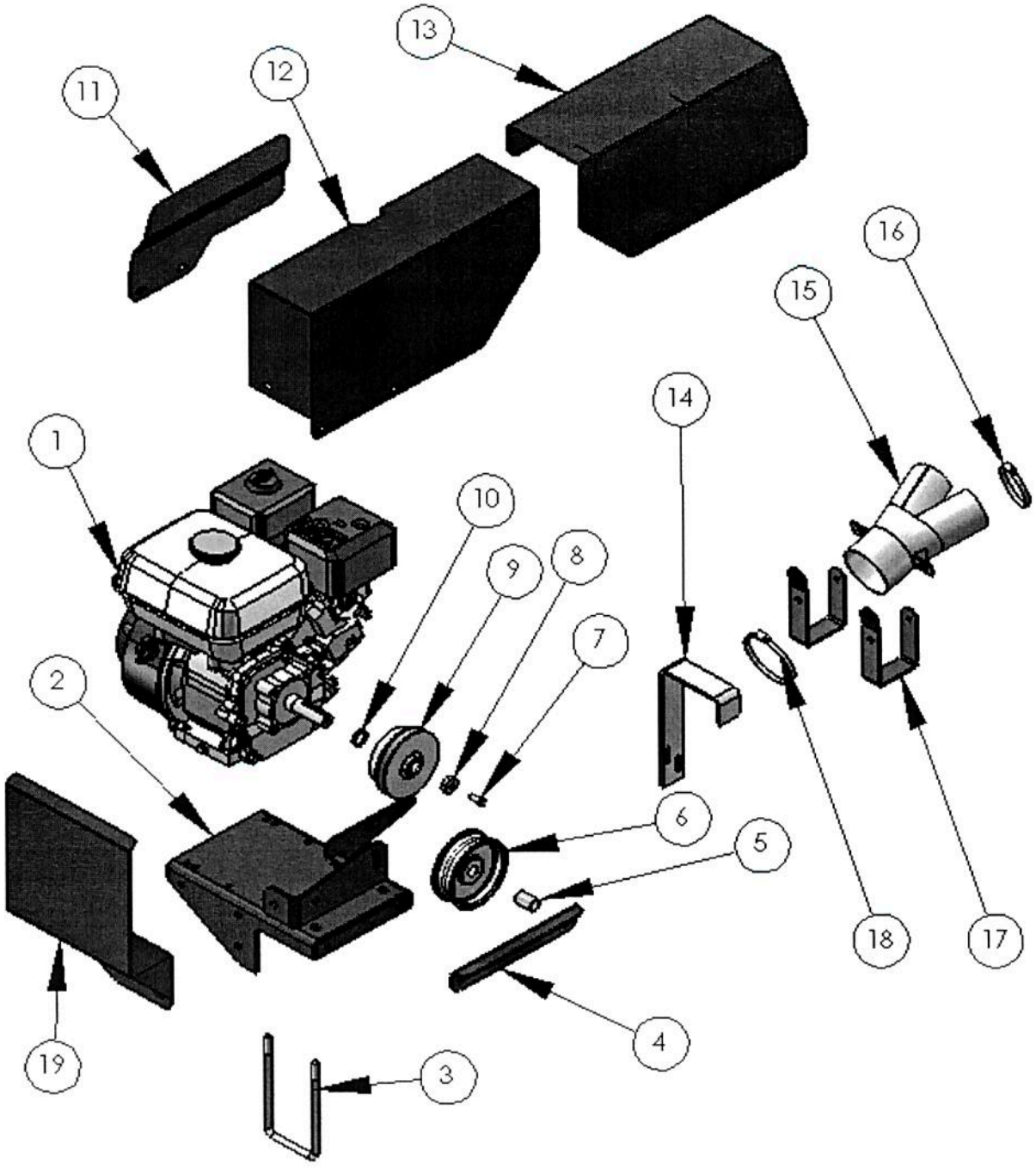
13
12
11
16
15
14
1
10
9
8
7
2
6
5
18
17
4
19
3

GAS ENGINE ASSEMBLY

ITEM	PART NO.	DESCRIPTION	QTY.
1.	11.3898	Gas Engine – 9 HP	1
2	03.17093	Gas Engine Mount	1
3	17.17210	U Bolt ½ X 4 X 8 1/4	2
4	04.17095	Arm - Pulley	1
5	07.547	Tube – Bushing	1
6	11.549	Pulley	1
7	17.5335	Bolt – 3/8 X 1 Fine Thread	1
8	08.5326	Clutch Washer	1
9	11.13796	Centrifugal Clutch	1
10	23.13792	Spacer – Clutch	1
11	04.17117	Engine Shield	1
12	03.17102	Engine Shield	1
13	03.17109	Fan Pulley Shield	1
14	04.17134	Bracket – Hose	1
15	03.5746	Air Line Splitter	1
16	17.1856	Hose Clamp HS 48	4
17	04.17115	Clamp – Splitter	2
18	17.391	Hose Clamp – HS 64	2
19	03.17239	Engine Shield	1
	11.17142	Fan Belt – B83*	1
	12.16981	Hose – 4" dia. X 78" (fan to splitter)*	1
	12.6763	Hose – 3" dia. X 27" (splitter to manifold)*	2

*not shown

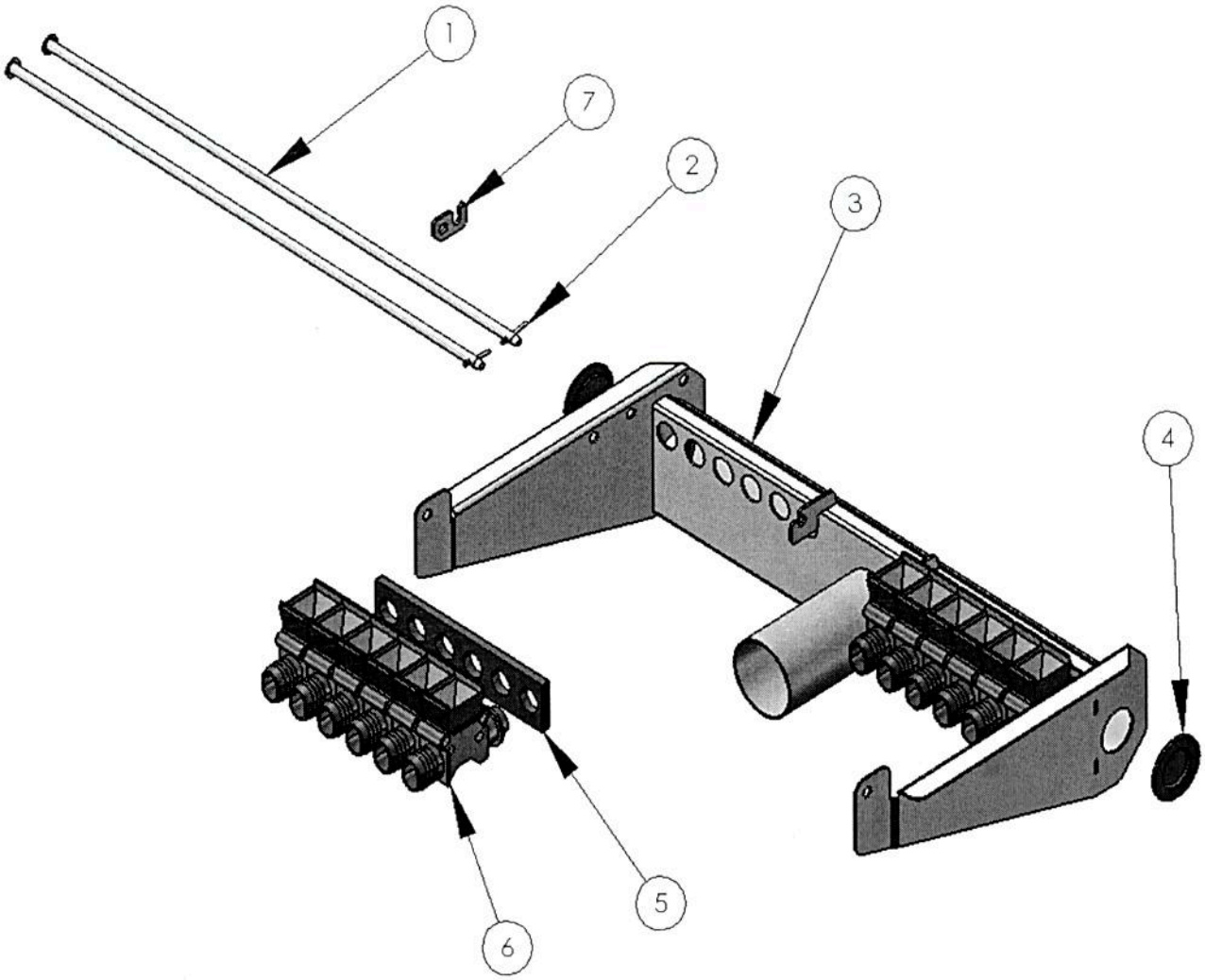
1
7
2
3
4
5
6

MANIFOLD

ITEM	PART NO.	DESCRIPTION	QTY.
1	02.6249	Venturi Rod	8
2	23.11196	Cotter Pin 1/8 X 1"	8
3	03.16369	Manifold	2
4	15.7837	Manifold Plug	4
5	15.6585	Manifold Gasket	4
6	15.6256	Venturi – 1 ¼"	24
7	23.7175	Clearshield Tab	2

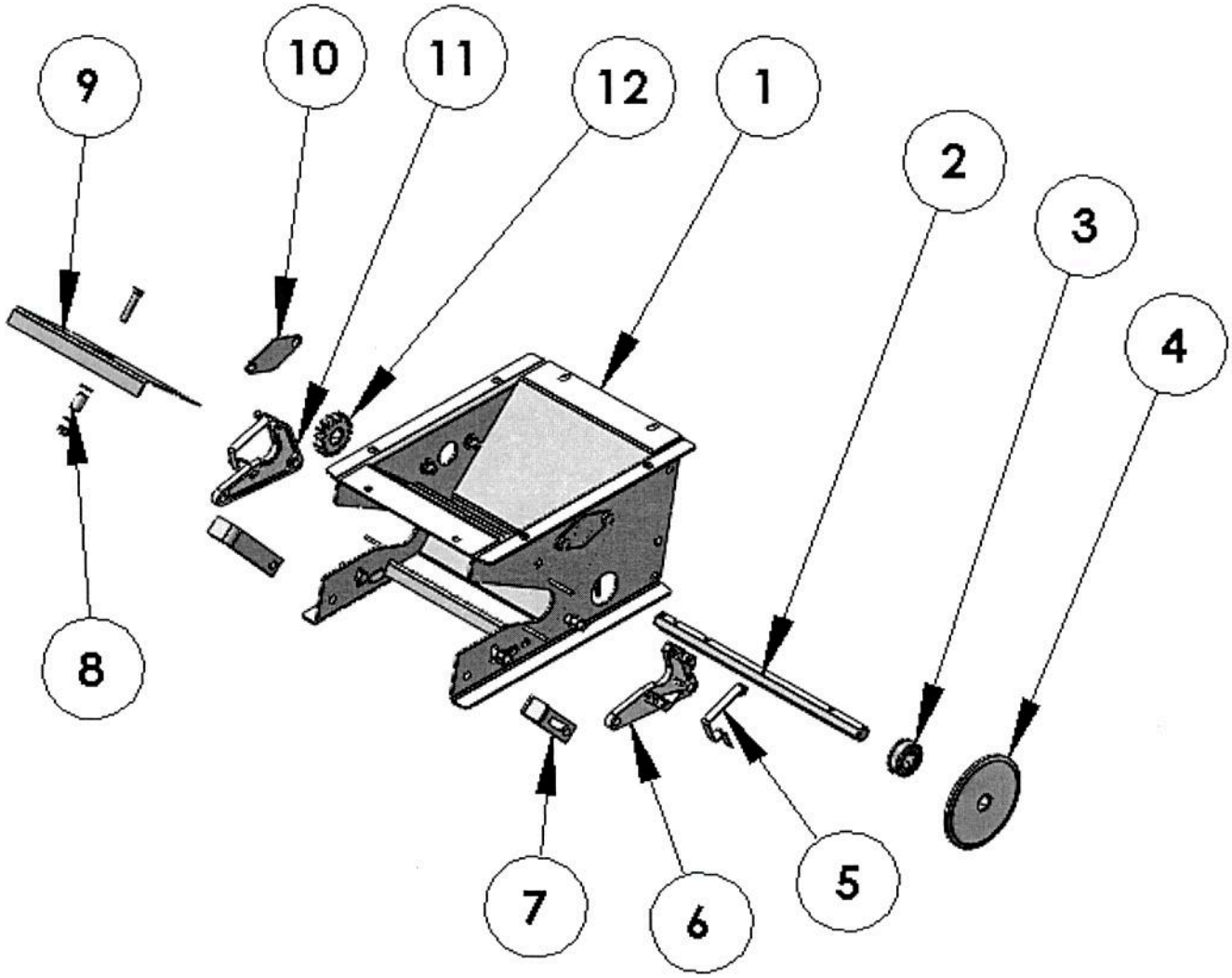
9
10
11
12
1
2
3
4
8
7
6
5

METERING BOTTOMS

ITEM	PART NO.	DESCRIPTION	QTY.
1	03.16340	Metering Bottom	4
2	08.16476	Hex Shaft	4
3	11.1408	Bearing – ¾" Hex	8
4	14.6065	Sprocket – 40B30 Hex Bore	4
5	17.1741	Latch, Bearing Retainer	4
6	15.1782	Bearing Housing RH	4
7	03.6067	Manifold Latch	8
8	09.964	Spring – Slide Gate	4
9	23.9825	Slide Gate	4
10	23.16003	Plate – Cap	8
11	15.1783	Bearing Housing LH	8
12	11.1566	Gear – 16 Tooth	4

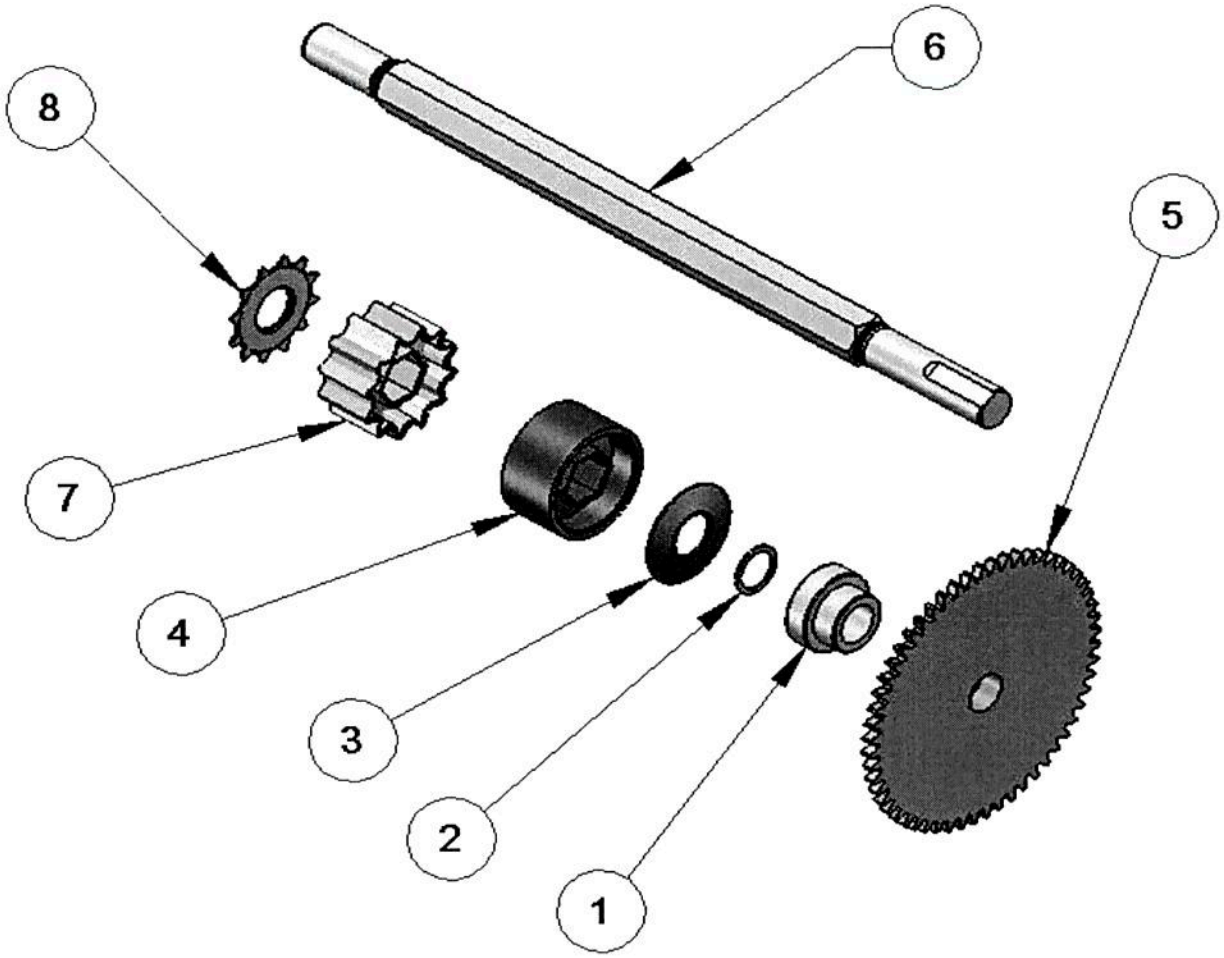
8
6
5
7
4
3
2
1

METERING ROLLER

ITEM	PART NO.	DESCRIPTION	QTY.
1	14.239	Ball Bearing - 1"	8
2	17.5731	Snap Ring, 5108-106	8
3	15.7389	Disc - Roller End (Red Roller only)	8
4	15.7388	Red Roller Segment - 28 Groove	24
5	03.6118	56T Gear	4
6	08.16343	Roller Shaft – 9"	4
7	15.13544	Grey Roller Segment -12 Groove	24
8	15.13545	Disc – Roller End - 12 Groove	8
	02.16342	Red Roller Assembly, -28 Groove c/w shaft ass'y, & bearings	4
	02.17149	Grey Roller Assembly, – 12 Groove c/w shaft ass'y, & bearings	4

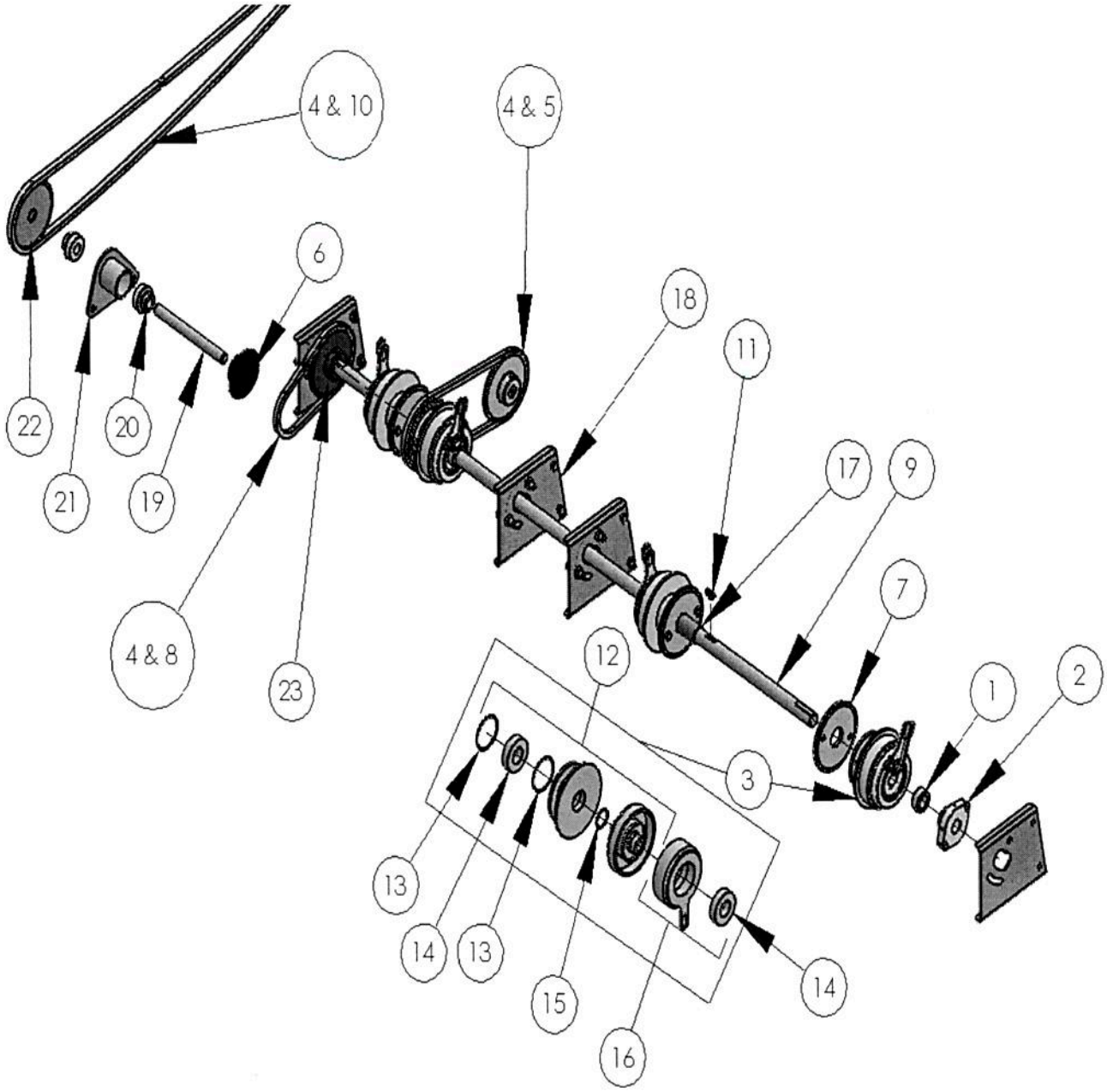
4 & 10
4 & 5
6
18
11
22
20
21
19
17
9
7
4 & 8
23
12
1
2
3
13
14
13
15
16
14

CLUTCH SHAFT ASSEMBLY

ITEM	PART NO.	DESCRIPTION	QTY.
1	14.274	Collar, 1" I.D.	2
2	14.271	Bearing 1"	4
3	11.272	Electric Clutch	4
4	14.1496	Connecting Link, # 40 chain	6
5	14.6737	Roller Chain, # 40, 72 rollers	4
6	14.6169	Sprocket, 40B20 ¾" bore	1
7	14.200	Sprocket, 40A30	4
8	14.16993	Roller Chain, # 40, 45 rollers	1
9	08.16978	Clutch Shaft	1
10	14.16991	Roller Chain, # 40, 144 rollers	1
11	17.349	Woodruff Key, ¼ X 1	1
12	11.7121	Armature and Rotor Assemble 1" (inc. items 13 thru 15)	1
13	17.1423	Snap Ring	2
14	14.1424	Bearing, 6206- 2RS	2
15	11.1925	Spacer Ring	A.R.
16	16.1422	Magnetic Coil Assembly (Non-stepped)	1
	11.6970	Magnetic Coil Assembly (stepped)	1
17	07.16999	Tube – Spacer	4
18	04.14141	Bracket – Clutch Shaft	4
19	08.16490	Shaft - Idler	1
20	14.6553	Bearing - Flange	2
21	03.16877	Idler Housing	1
22	14.192	Sprocket - 40B30 ¾"	1
23	14.449	Sprocket – 40B30 1"	1

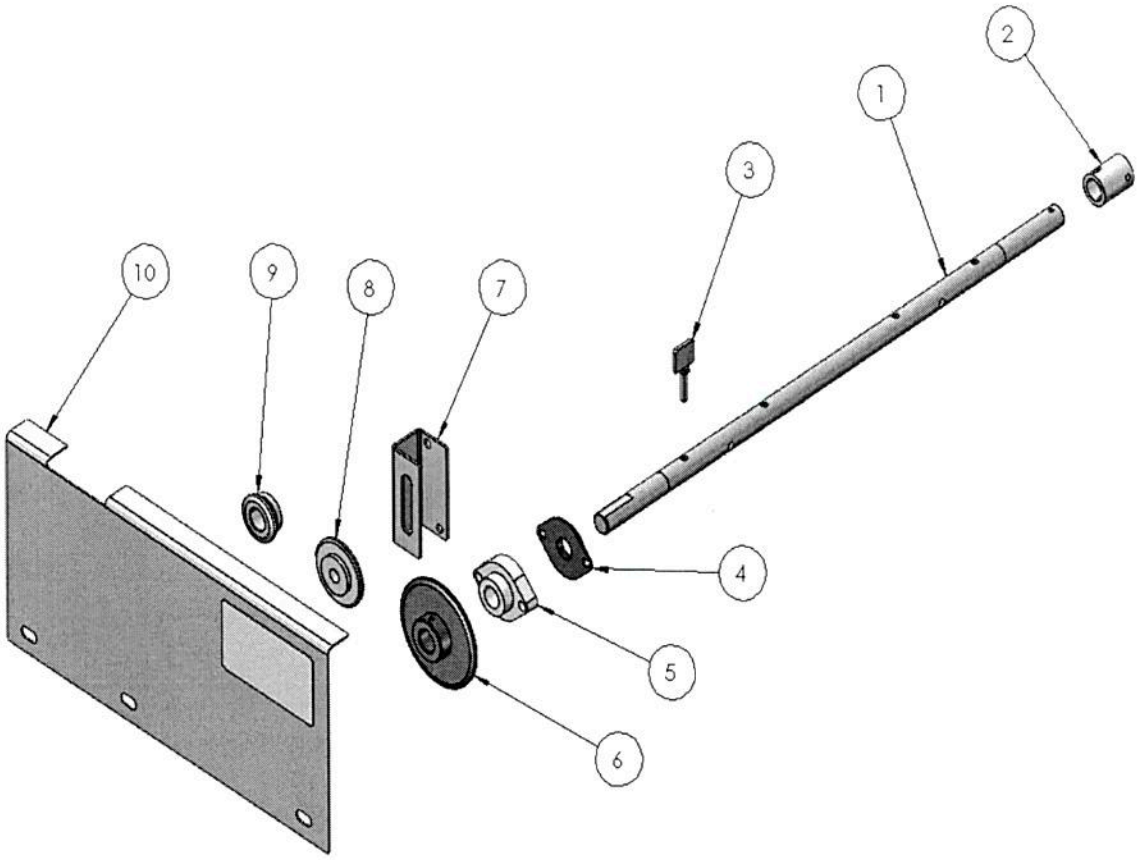
1
2
3
4
5
6
7
8
9
10

AGITATOR KIT (18.17084)

ITEM	PART NO.	DESCRIPTION	QTY.
1	08.17083	Shaft - Agitator	2
2	07.703	Connecting Sleeve	1
3	03.9478	Paddle	12
4	14.110	Bearing Seal	8
5	14.271	Bearing – 1" 2 Bolt	4
6	14.449	Sprocket, 40B30 1" bore	1
7	04.17099	Bracket - Tensioner	1
8	14.1197	Idler Sprocket 40A18	1
9	08.825	Sprocket 40B12	1
10	02.17105	Agitator Shield	1

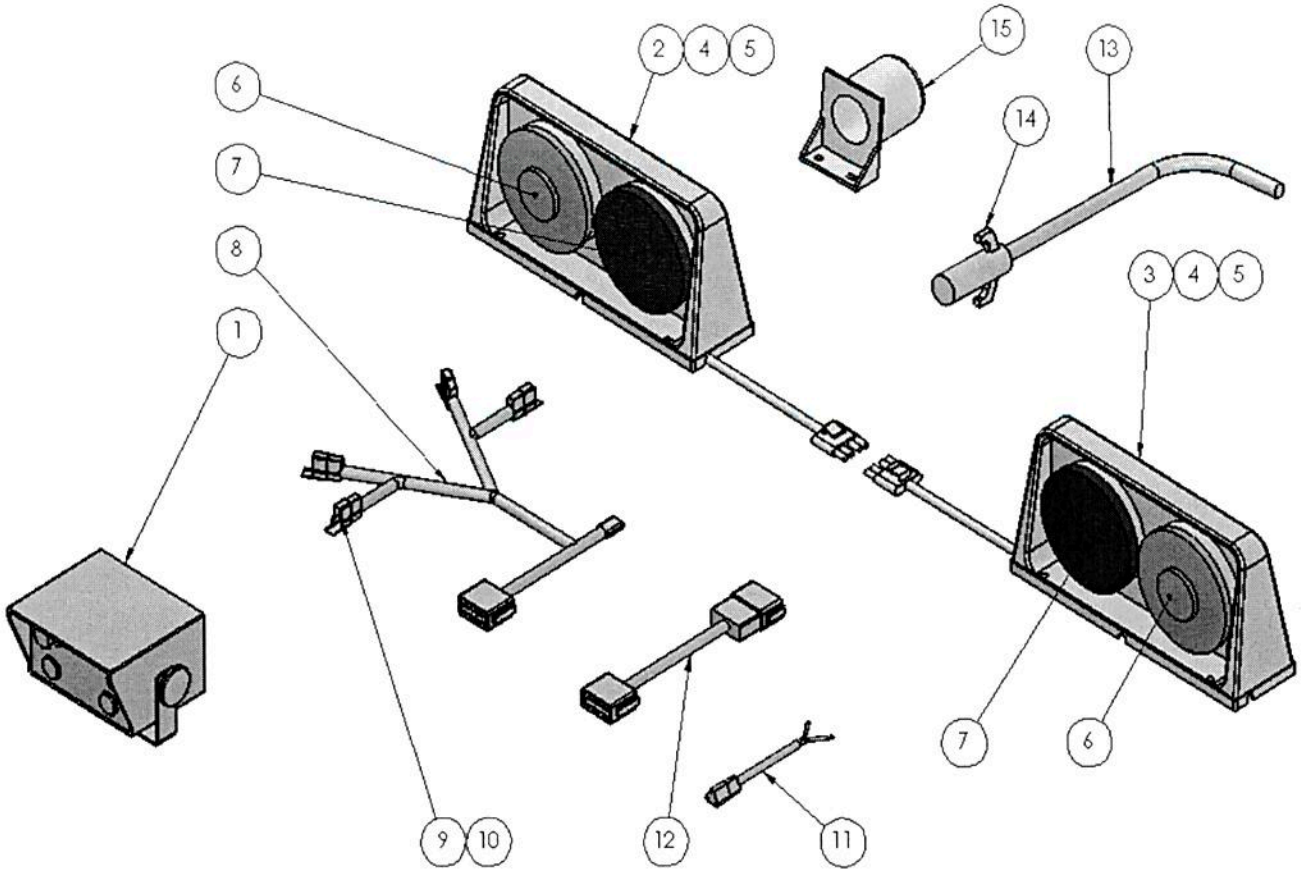
2
4
5
15
13
6
14
7
8
3
4
5
1
7
6
9
10
12
11

CONTROL UNIT AND LIGHTS

ITEM	PART NO.	DESCRIPTION	QTY.
1	16.17069	DTI Control Unit	1
2	16.9533	Lamp – Dual RH Wesbar # 2616	1
3	16.9534	Lamp – Dual LH Wesbar # 2615	1
4	16.7870	Bulb 12V # 1157	4
5	16.7872	Lense – Red Wesbar # 2651	2
6	16.7871	Lense – Amber Wesbar # 2650	4
7	16.8505	Lense – Black Wesbar # 2652	2
8	16.17070	Implement Harness	1
9	16.3754	Connector Shell - Female	4
10	16.8526	Connector Contact - Female	4
11	16.18215	Power Supply Harness	1
12	16.18218	Display Unit Harness	1
13	16.9534	Tail Light Harness	1
14	16.7873	Connector – 7 Wire SAE J560	1
15	15.7861	Storage Receptacle	1

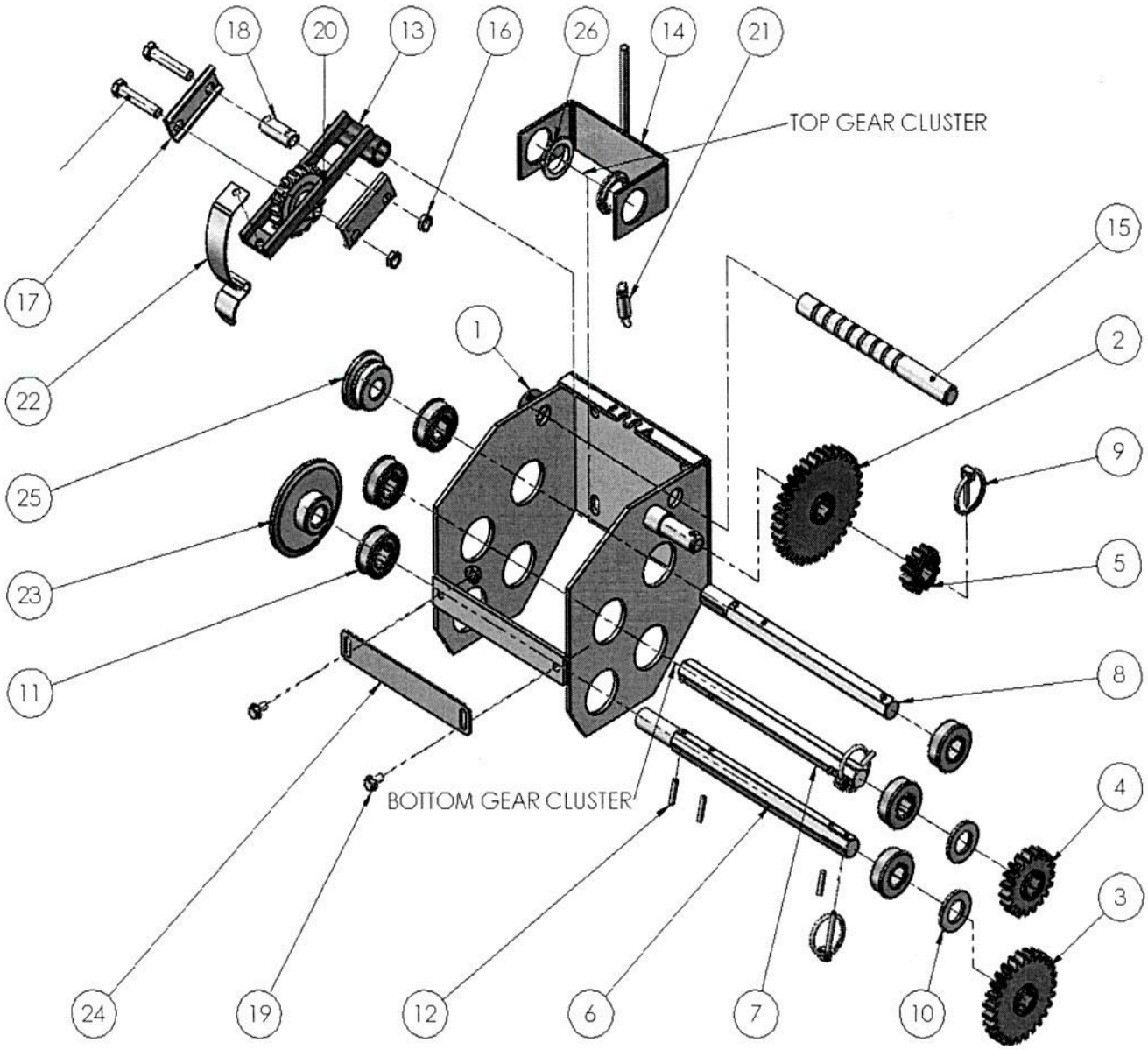
18
20
13
16
26
14
21
TOP GEAR CLUSTER
15
17
1
2
22
9
25
5
23
11
8
BOTTOM GEAR CLUSTER
4
3
24
19
12
6
7
10

GEARBOX

ITEM	PART NO.	DESCRIPTION	QTY.
	02.17300	Gearbox Assembly (C/W Wheel Drive Arm)	1
1.	03.6540	Gearbox Case	1
2	11.6167	Gear – 34T	1
3	11.6166	Gear – 27T	1
4	11.5603	Gear – 19T	1
5	11.5605	Gear – 12T	1
6	08.6545	Shaft – Input	1
7	08.5571	Shaft – Center	1
8	08.6779	Shaft – Output	1
9	17.9640	Linch Pin	3
10	17.3127	Spacer	2
11	11.1408	Bearing – ¾" Hex	6
12	17.6168	Spring Pin 3/16 X 1	9
13	03.5575	Shifter	1
14	03.5587	Carriage	1
15	08.5573	Shaft – Top Shifter	1
16	17.6164	Jam Nut 3/8 NC	2
17	04.5581	Idler Track	2
18	11.1397	Tube – Spacer	1
19	17.6019	Flange Bolt ¼ X ½ NC	2
20	02.4543	Idler Gear	1
21	11.1401	Spring	1
22	09.6124	Spring Clip	1
23	14.191	Sprocket – 40B22 ¾"	1
24	23.6329	Adjustment Plate	1
25	14.190	Sprocket – 40B12 ¾"	1
26	11.1400	Plastic Bushing	2

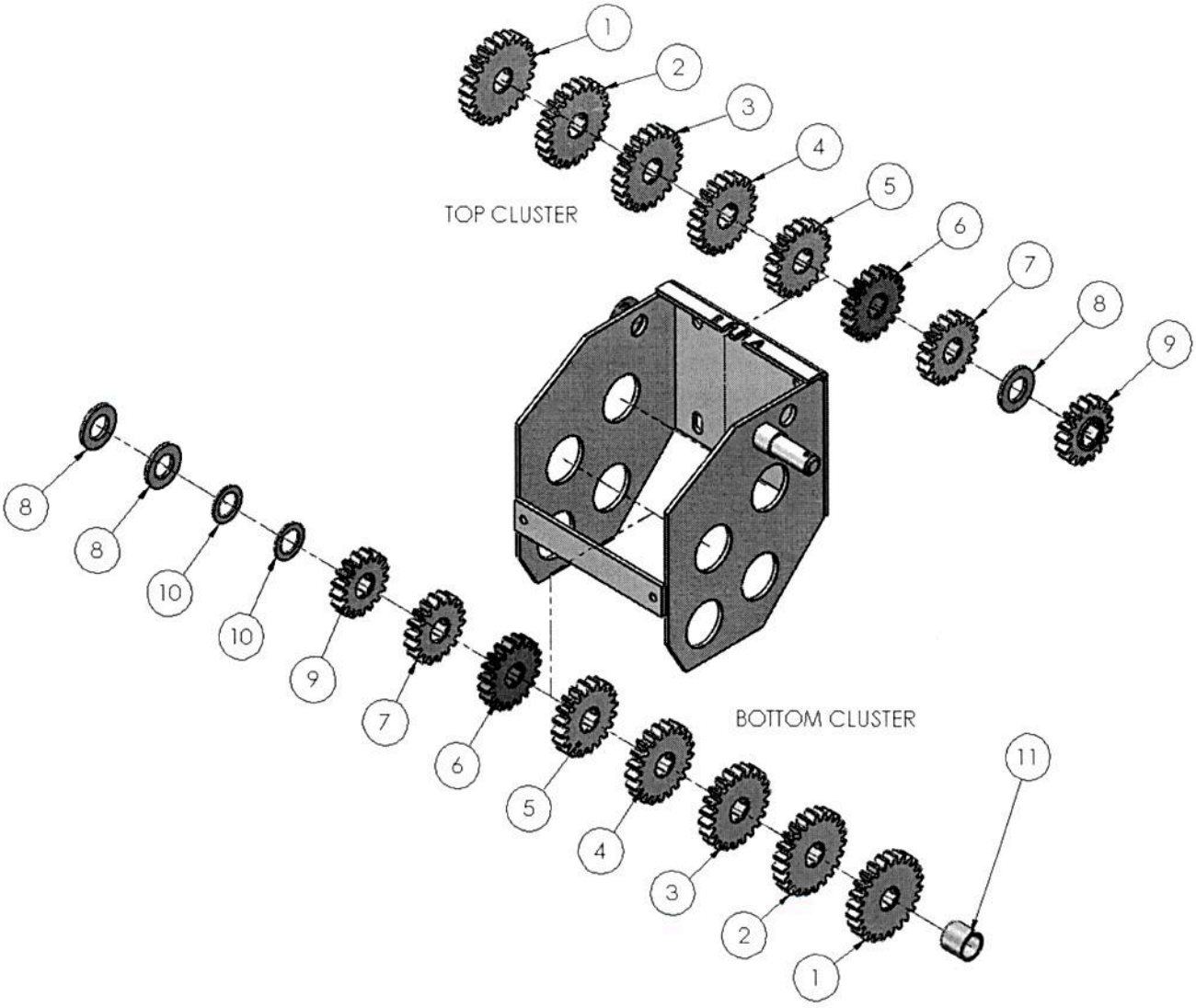
TOP CLUSTER
BOTTOM CLUSTER
1
2
3
4
5
6
7
8
9
10
11

GEAR CLUSTERS

ITEM	PART NO.	DESCRIPTION	QTY.
1.	11.1562	Gear – 24T	2
2	11.5601	Gear – 23T	2
3	11.1563	Gear – 22T	2
4	11.5602	Gear – 21T	2
5	11.1564	Gear – 20T	2
6	11.5603	Gear – 19T	2
7	11.1565	Gear – 18T	2
8	17.3127	Spacer	3
9	11.5604	Gear – 17T	2
10	17.6416	Shim – 7/8 X 1 3/8 X .075	2
11	07.5579	Shaft Collar	1

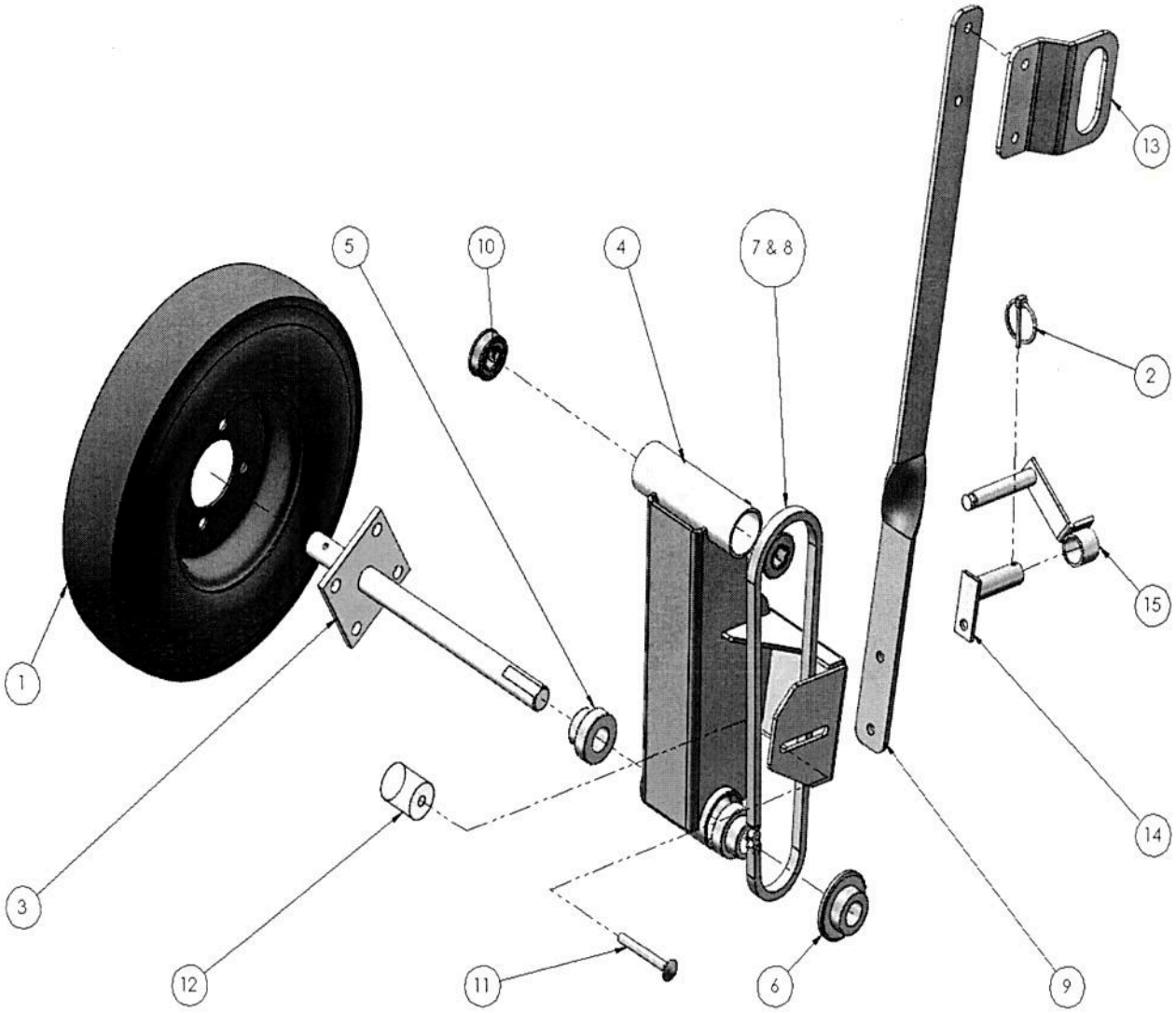
1
2
3
4
5
6
7 & 8
9
10
11
12
13
14
15

WHEEL DRIVE ASSEMBLY

ITEM	PART NO.	DESCRIPTION	QTY.
1.	10.1204	Tire & Rim 4.00/8 X 3.75	1
2	17.9640	Linch Pin	1
3	03.6661	Axle – Wheel Drive	1
4	03.16883	Wheel Drive Pivot	1
5	14.239	Bearing	2
6	14.1990	Sprocket – 40B18 1"	1
7	14.6737	Roller Chain #40 72 rollers	1
8	14.1497	Connecting Link	1
9	09.16889	Engagement Lever	1
10	11.1408	Bearing – ¾" Hex	2
11	17.6860	Carriage Bolt 3/8 X 3	1
12	15.6837	Chain Tensioner	1
13	04.17001	Handle – Wheel Drive Lever	1
14	03.6314	Crank Storage	1
15	03.6311	Calibration Crank	1

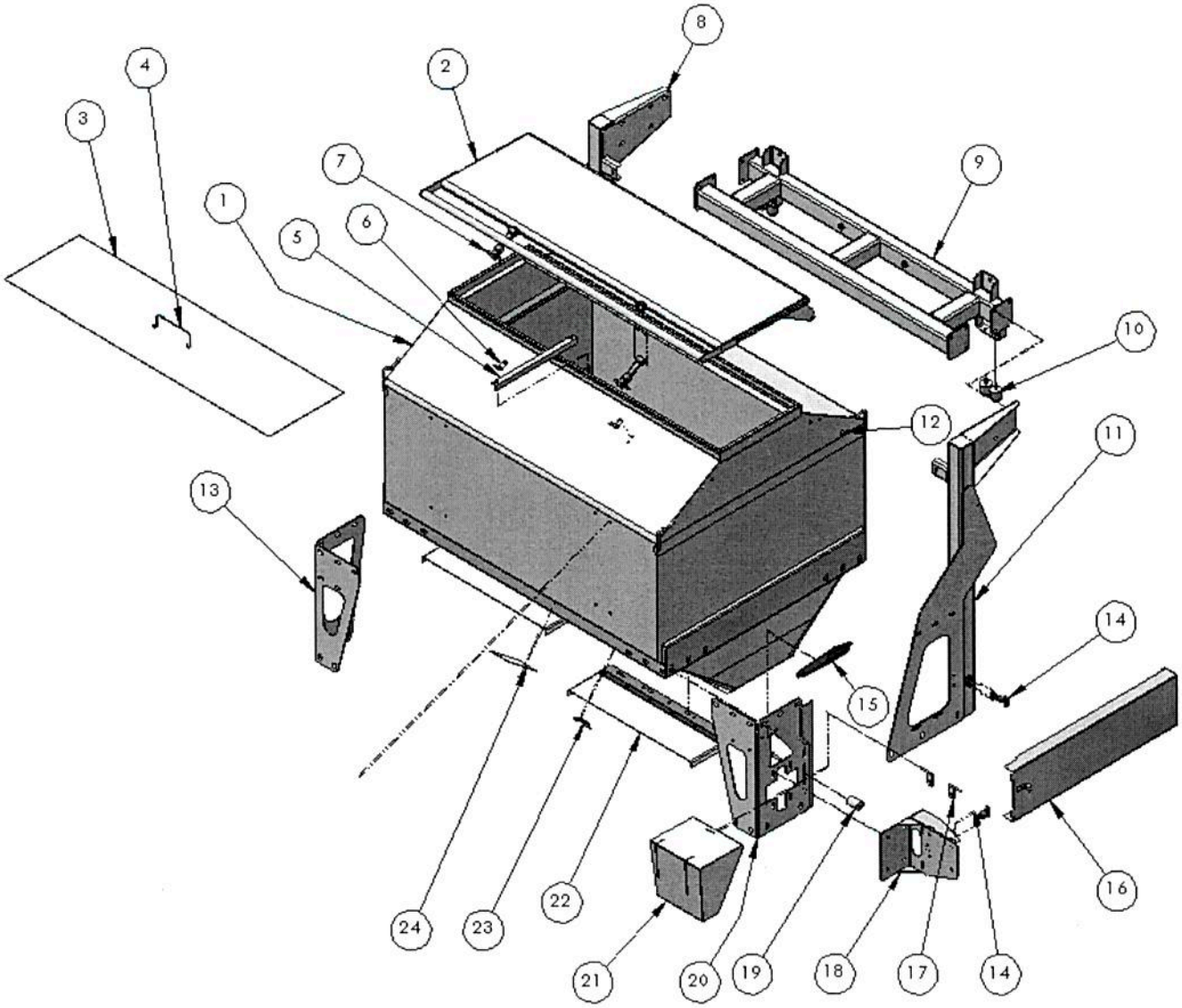
8
4
2
3
7
9
1
5
6
10
12
11
13
14
15
16
24
23
22
21
20
19
18
17
14

HOPPER

ITEM	PART NO.	DESCRIPTION	QTY.
1.	03.16400	Hopper	1
2	02.17157	Lid c/w decals	1
3	21.17149	Hopper Screen	1
4	23.5966	Screen Handle	1
5	06.17151	Angle – Screen Support	1
6	17.11777	Bracket – Rubber Latch	2
7	17.299	Rubber Latch – Long	2
8	03.17036	Boom Mount – RH	1
9	03.16900	Boom Mount – Center	1
10	15.7309	Rubber Stop	4
11	03.17035	Boom Mount – LH	1
12	23.11773	Bushing – Lid Hinge	2
13	04.17027	Leg	1
14	17.1802	Rubber Latch – Short	2
15	04.16890	Latch – Wheel Drive Lever	1
16	03.16895	Shield	1
17	03.6402	Hinge – Gearbox Lid	2
18	03.16881	Gearbox Mount	1
19	15.16893	Chain Tightener	1
20	03.17128	Leg	1
21	03.6678	Gearbox Lid	1
22	02.17051	Clear Shield	2
23	05.667	Latch – Clear Shield	2
24	15.229	Sight Glass	1

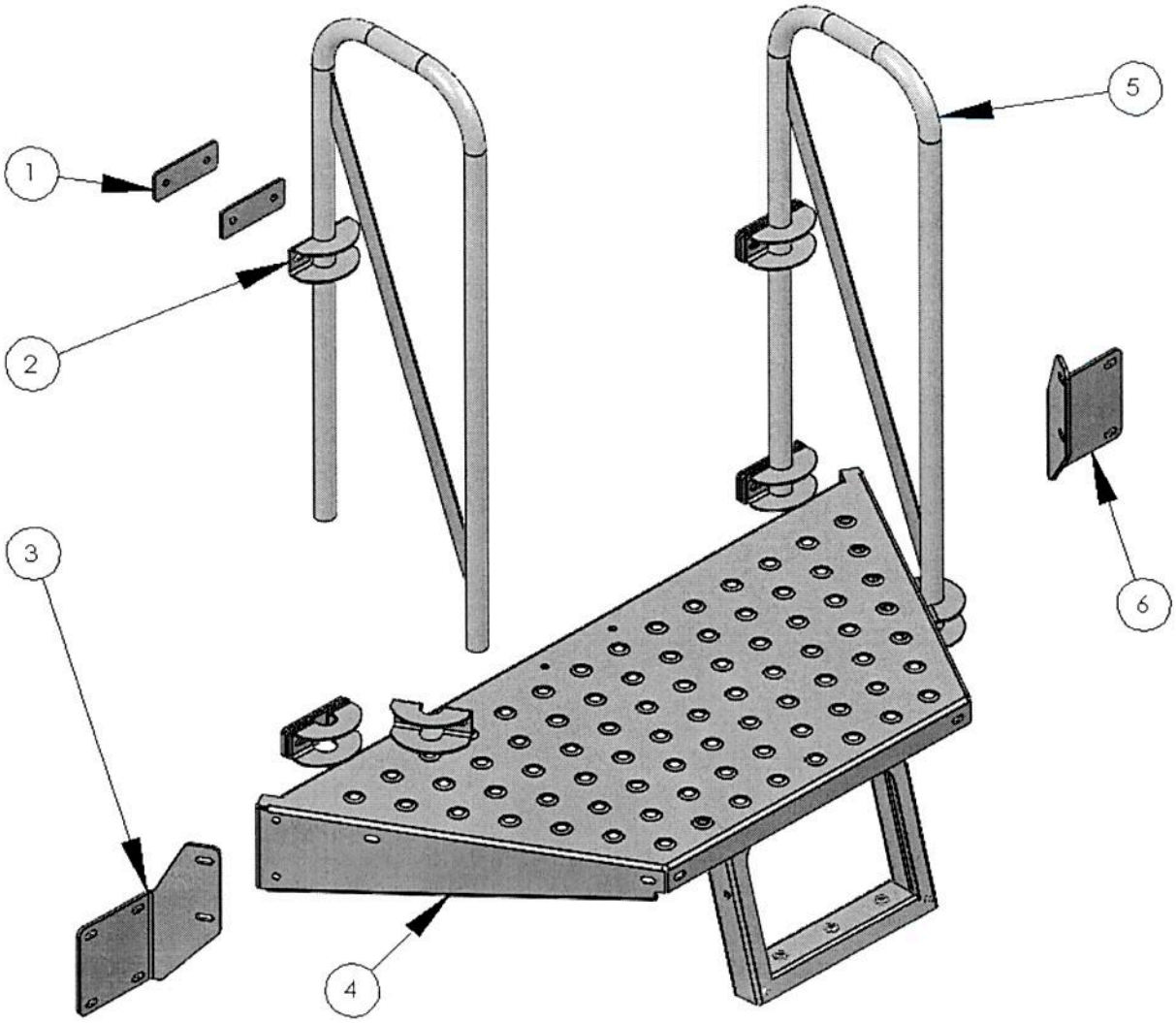
1
2
3
4
5
6

PLATFORM

ITEM	PART NO.	DESCRIPTION	QTY.
1.	04.16985	Backing Plate	8
2	04.16987	Bracket - Railing	6
3	04.17032	Mount - Platform	1
4	03.16982	Platform	1
5	03.17031	Railing	2
6	04.17030	Mount – Platform	1

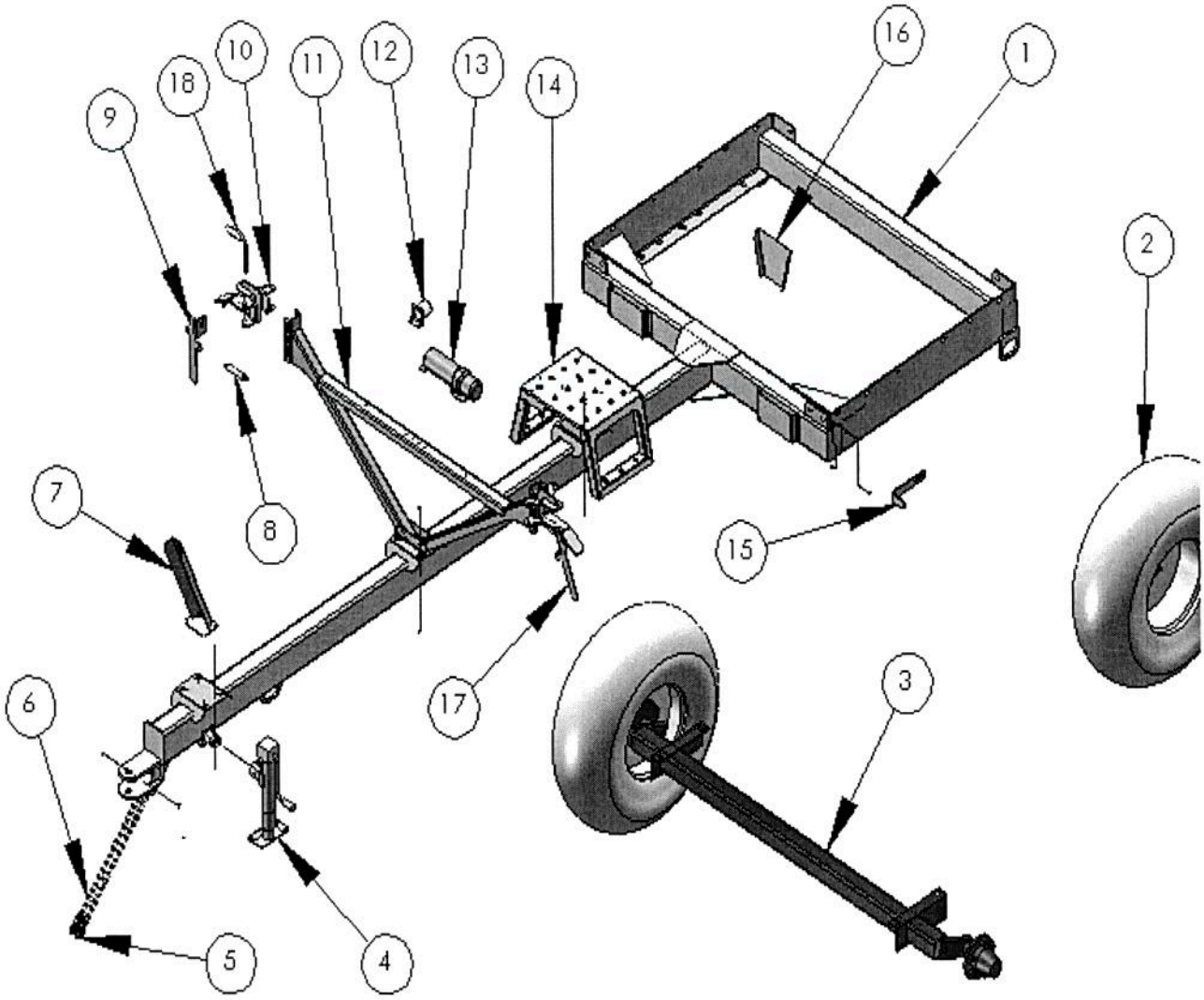
16
1
10
18
11
12
13
14
9
2
7
8
15
17
3
6
5
4

FRAME AND AXLE

ITEM	PART NO.	DESCRIPTION	QTY.
1.	03.16852	Frame	1
2	10.16842	Tire & Rim 14L 16.1 SL	2
3	10.16382	Axle – Torflex #12 7000 lb	1
4	10.865	Jack	1
5	14.11105	Hook – ¼" Grab c/w Latch	2
6	14.7139	Chain – 5/16 Gr. 30 20 Links	2
7	03.16647	Hose Support	1
8	09.4311	Spring	2
9	04.16554	Latch RH	1
10	03.16941	Boom Receiver	2
11	03.16926	Boom Cradle	1
12	15.7861	Storage Receptacle	1
13	15.15475	Manual Holder c/w cap	1
14	03.16974	Step	1
15	04.16998	Bracket – Wheel Drive Lock	1
16	03.9860	Calibration Funnel	4
17	04.17139	Latch LH	1
18	02.17304	Pin – Transport Lock	2

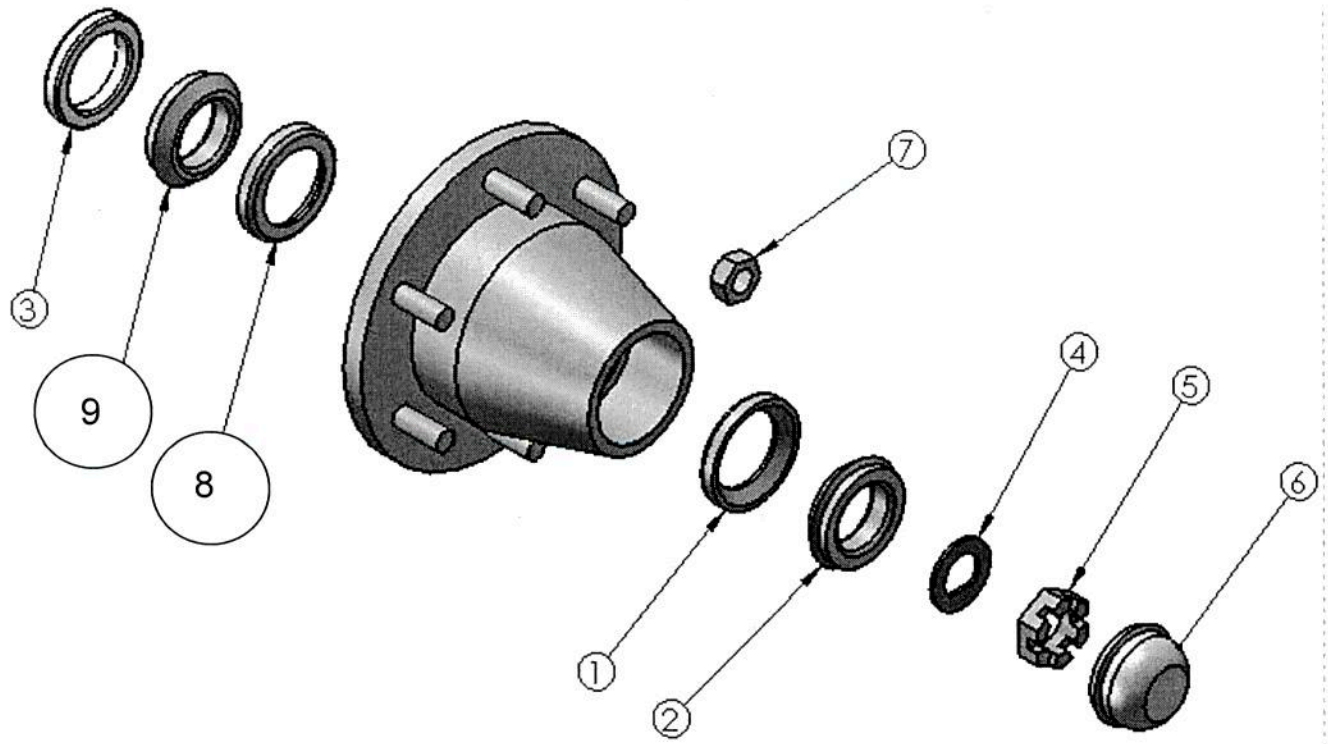
3
9
8
7
4
5
6
1
2

WHEEL HUBS

ITEM	PART NO.	DESCRIPTION	QTY.
	10.17154	Complete Hub Assembly	2
1	14.17297	Bearing Cup (031-032-01)	2
2	14.17155	Bearing Cone (031-032-02)	2
3	14.6808	Grease Seal 10-1	2
4	17.6812	'D' Washer (5-23)	2
5	17.6810	Spindle Nut (165686)	2
6	14.6813	Dust Cap (45896)	2
7	14.4597	Wheel Nut – 9/16"	6
8	14.17296	Bearing Cup Inner (031-075-01)	2
9	14.17156	Bearing Cone Inner (031-075-02)	2

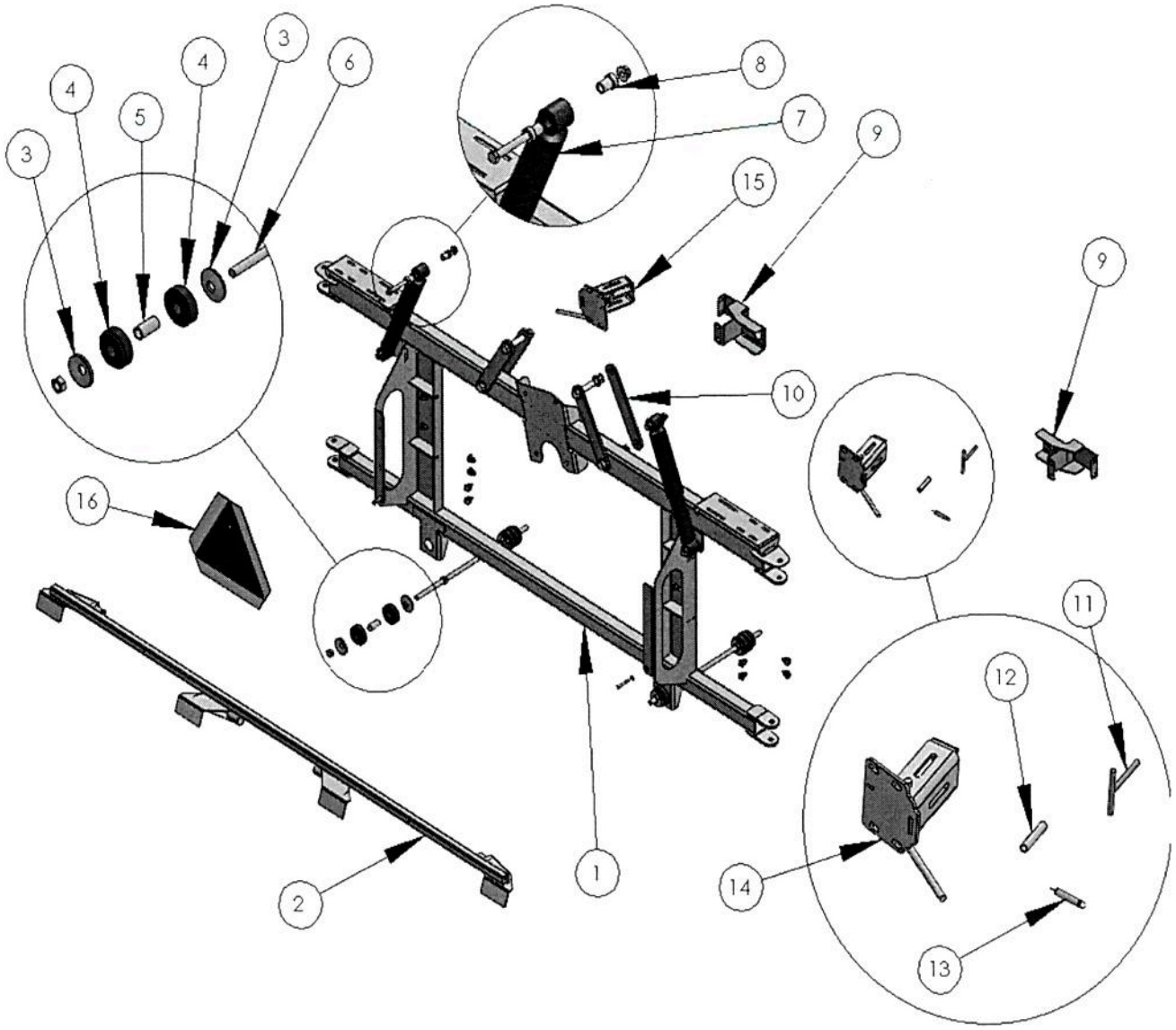
1
2
3
4
5
6
7
8
9
10
11
12
13
14
15
16

CENTER SECTION

ITEM	PART NO.	DESCRIPTION	QTY.
1.	03.16420	Center Section	1
2	03.16645	Deflector Assembly – Center Section	1
3	17.6723	Conical Washer	8
4	15.6589	Rubber Mount	8
5	07.6724	Spacer	4
6	17.6725	Stud	2
7	11.10202	Shock Absorber	2
8	07.15527	Bushing – Shock Absorber	8
9	03.16920	Boom Mount	2
10	04.16415	Swing Arm	4
11	03.6749	Guide	2
12	09.5218	Spring – Compression	2
13	11.1401	Spring – Extension	2
14	03.16631	Boom Latch RH	1
15	03.16635	Boom Latch LH	1
16	22.3473	SMV Sign	1
	02.16629	Boom Latch RH (inc. items 11,12,13,14)	1
	02.16630	Boom Latch LH (inc. items 11,12,13,15)	1

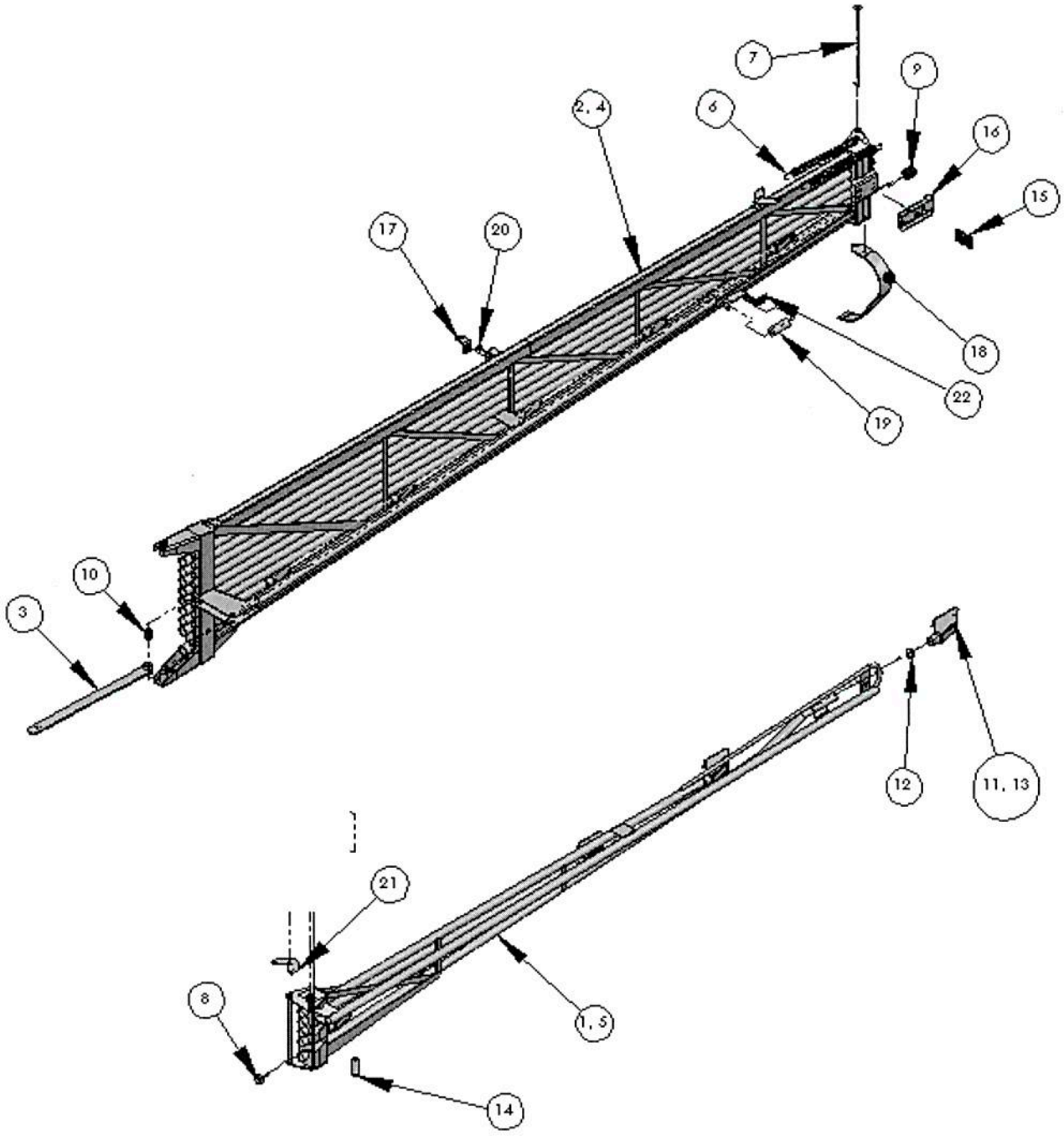
7
9
2, 4
6
16
15
17
20
18
22
19
10
3
12
11, 13
21
8
1, 5
14

BOOMS AND BOOM TIPS

ITEM	PART NO.	DESCRIPTION	QTY.
1.	03.16505	Boom Tip LH	1
2	03.16454	Boom LH	1
3	03.6747	Boom Latch Bar	2
4	03.16520	Boom RH (not shown)	1
5	03.16525	Boom Tip RH (not shown)	1
6	09.9800	Spring – Extension	4
7	03.16764	Pin – Boom Tip Hinge	2
8	15.6768	Rubber Bumper	2
9	15.6588	Seal – Boom Tip	10
10	15.4539	Rubber Bushing	2
11	03.6720	Deflector – LH	10
12	17.390	Hose Clamp – HS 24	24
13	03.6719	Deflector – RH	10
14	15.17067	Roller – Breakaway	2
15	09.3966	Spring – Compression	4
16	03.17065	Breakaway Latch	2
17	05.998	Transport Bracket	2
18	09.6864	Boom Guard	2
19	15.16979	Boom Roller	2
20	15.6866	Rubber Bumper	2
21	04.9801	Link – Spring	2
22	05.17306	Bracket – Safety Lock	2

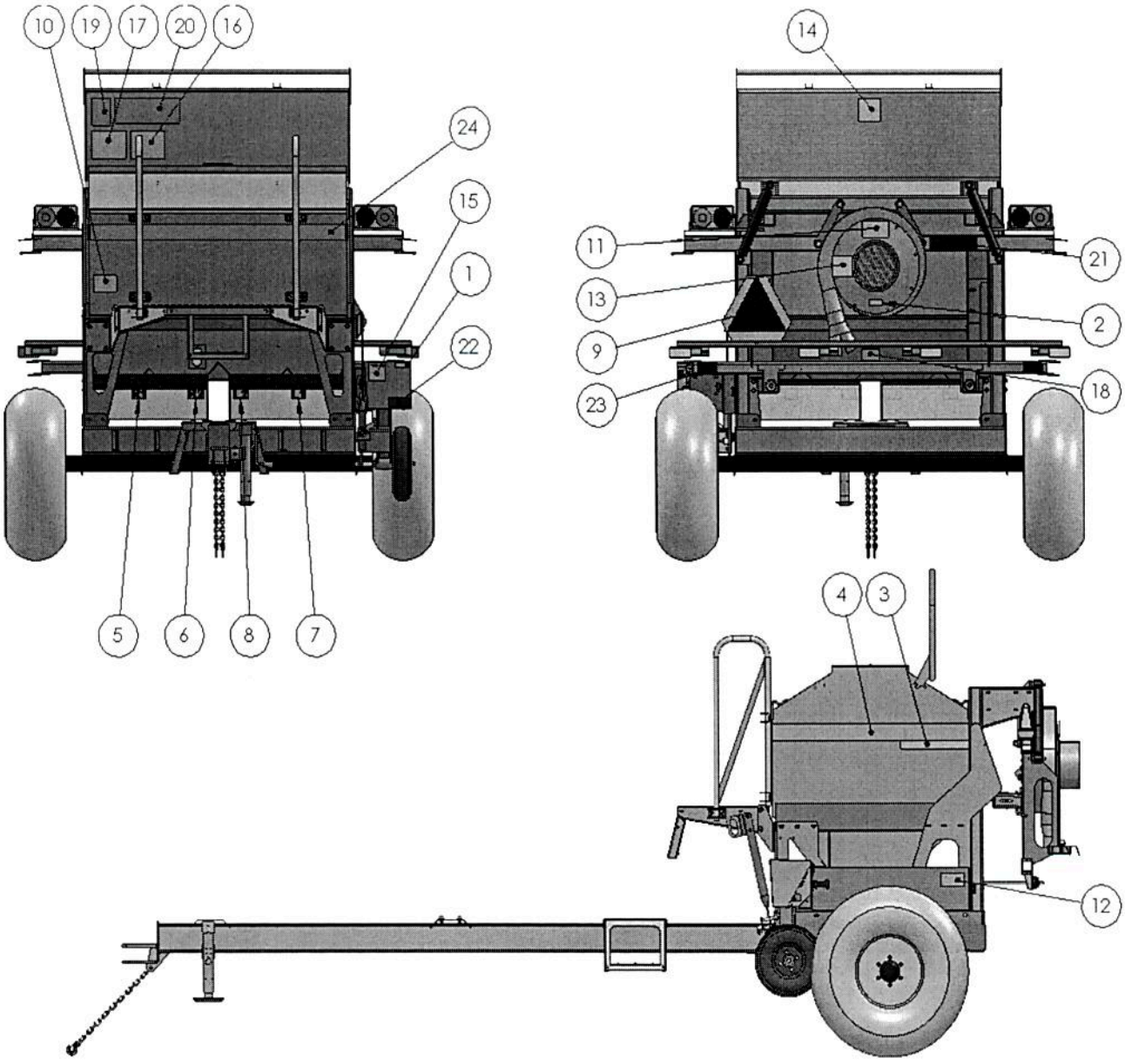
10
19
17
20
16
24
15
1
22
5
6
8
7
14
11
13
9
23
21
2
18
4
3
12

DECALS

ITEM	PART NO.	DESCRIPTION	QTY.
1.	22.1577	Gearbox Lubrication	1
2	22.1578	Fan Rotation Arrow	1
3	22.16232	Salford Decal	2
4	22.17111	Valmar Decal – short	2
5	22.17159	Decal – R1	1
6	22.17160	Decal – R2	1
7	22.17161	Decal – L1	1
8	22.17162	Decal – L2	1
9	22.3473	SMV Sign	1
10	22.3915	General Caution	1
11	22.3917	Rotating Parts	1
12	22.3920	Keep Shields in Place	1
13	22.3921	High Pressure Fluid	1
14	22.5840	Chemical Hazard	1
15	22.6143	Moving Parts	1
16	22.6190	Pesticide Chart – med & hi	1
17	22.6127	Pesticide Chart – ultra low & low	1
18	22.6547	Clutch Lockup	1
19	22.6668	Deflector Adjustment	1
20	22.7483	Daily Maintenance	1
21	22.7785	Valmar Logo	1
22	22.7876	Amber Reflector	1
23	22.8184	Red Reflector	2
24	22.17110	Valmar Decal – long	1

VALMAR

Box 100
Elie, MB
R0H 0H0

Phone (204) 353-2782
FAX (204) 353-2864

Printed in Canada

Issue Date: June 2016

Part No. 20.17125